修订 REV	标记 MARK	修改摘要 REVISION DESCRIPTION	签名 SIGNATURE	日期 DATE
AO		NEW DWG		2016-03-12

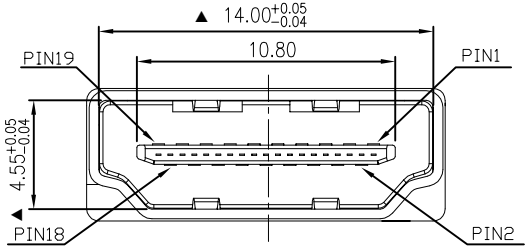

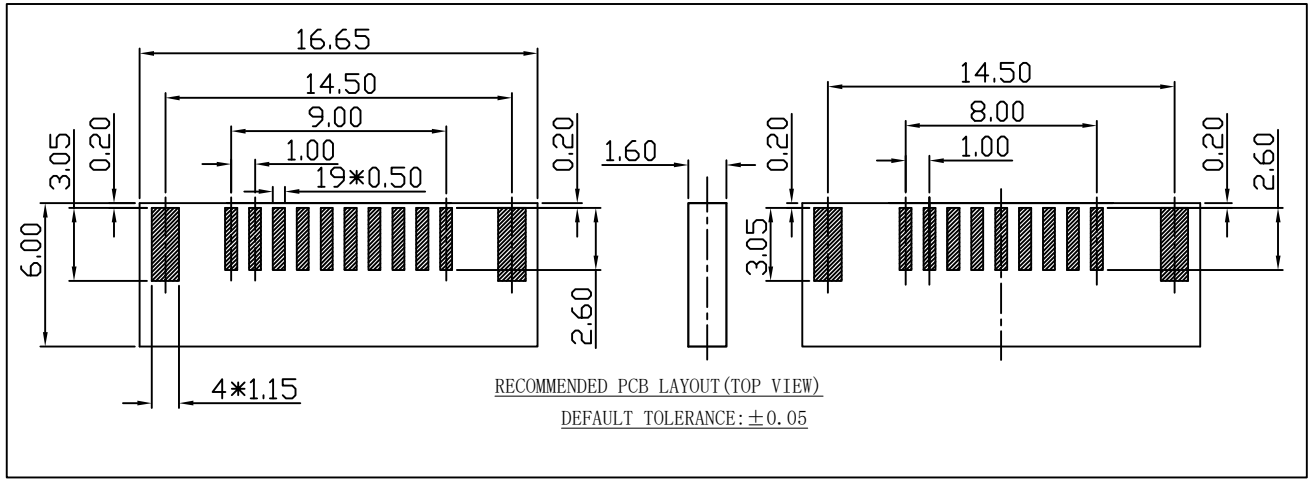

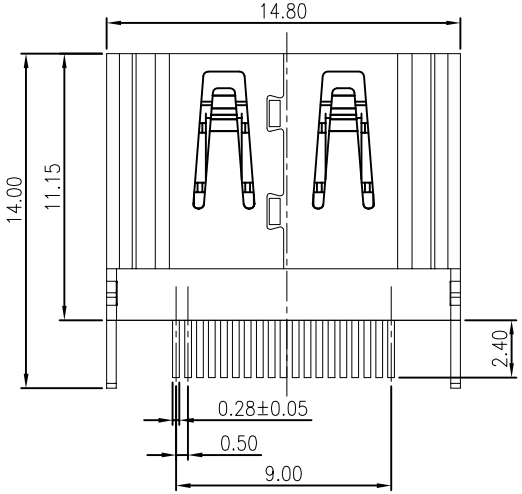

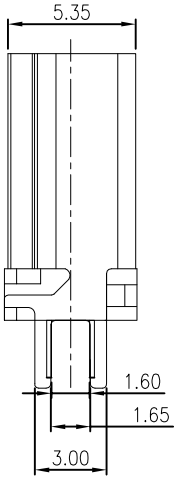

SPECIFICATION

1. Electrical characteristics
   - Contact Current Rating:0.5 A
   - Dielectric Withstanding Voltange:300V AC
   - Insulation Resistance:a. Mate 100MΩ MIN at 500V/DC
     b. Unmate 10MΩ MIN at 150V/DC
   - Contact Resistance:30mΩ MAX
   - Temperature Range:-20° C to +85° C
2. Mechanical
   - Mating Face:44.1N MAX
   - Unmatin Face:9.8N MIN;39.2N MAX
   - Durability:5000 Cycles
3. material:
   - HOUSING:THERMOPLASTICS HIGH TEMP LCP+GLASS FIBER BLACK COLOR,UL94V-0
   - CONTACT:Copper Alloy ,T=0.20MM
   - SHELL:Copper Alloy(SPCC) ,T=0.40MM
4. PLATING:
   - CONTACT:1～30u″GOLD/TIN PLATING ON CONTACT AREA
     100u″MIN,TIN PLATING ON SOLDERTAILS
     50u″MIN,NICKEL UNDERPLATING OVER ALL
   - SHELL:80u″, NICKEL UNDERPLATING OVER ALL

深圳市华德共创科技有限公司
Shenzhen Huade co-create Technology Co.,LTD
电话：0755-23304126 传真：0755-29940187

-TOLERANCES- UNLESS OTHERWISE SPECIFIED 公差参数表				TITLE: 产品名称: HDMI AF夹板1.6铜壳0.4镀镍 黑胶针长2.4			
X.X	±0.30	X.X°	±3°	APPD: 核准:	PART NO: 产品编号:	HDMI-GD-137PWB	
X.XX	±0.20	X.XX°	±2°	CHECK: 校对: 王建业	DATE	SCALE	UNIT	CODE NUMBER
X.XXX	±0.10	X.XXX°	±1°	DRAW: 绘图: 黄艳兰	2016-03-12	1:1	mm	A001