版 本	变 更 内 容	工程确认	日 期

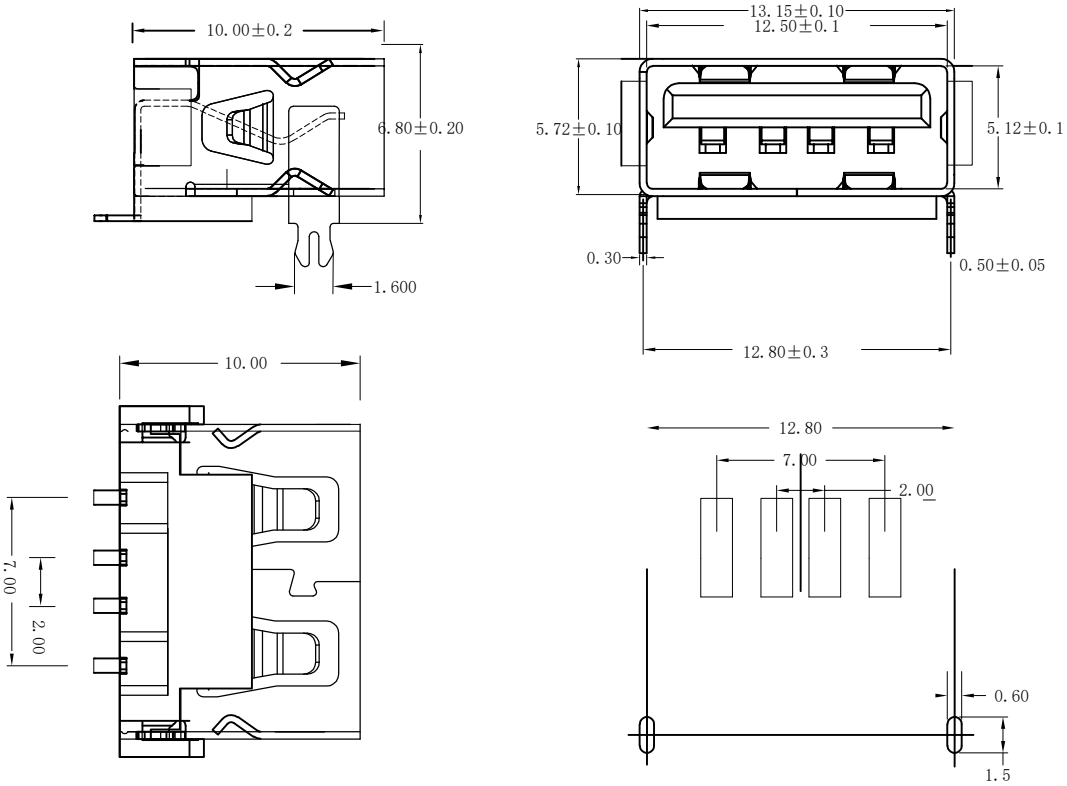

规格说明:Specifications:

电气特性:Electrical:

1. 额定电流：Current Rating
   1.5A/contact terminal
2. 额定电压：Voltage Rating
   30V DC
3. 接触阻抗:Contact Resistance
   30 milliohms MAX
4. 耐电压:Dielectnic Withstanding Voitage:
   500 V AC AT Sea Levol
5. 绝缘阻抗:Lnsulation Resistance:
   1000MEGA ohms MIN

物理性能:Mechanical:

1. 插拔力：Cnnector Mate and Unmate Force
   Mate force:3.57kgf(MAX)
   Unmate force:1.02kgf(MIN)
2. 端子保持力：Terminal Retenion
   1.2kgf(MIN)

原材料:Matorial:

1. 塑胶:Housing:
   Hing Temperature Tnermaplastics,
   Ul 94V-0 PBT White/Black
2. 端子:Contact:Copper Alloy C2680
3. 外壳:Shell: Copper Alloy C2680/SPCC

电镀:Finish:

1. 端子:Contact: Piated Gold in Mating Area;
   Tin On Solder Talls
2. 外壳:Shell:
   Nickel Plating

深圳市怡远科技有限公司 SHENZHEN YIYUAN TECHNOLOGY CO.,LTD	页码 (SHEET)	1/1	单位(UNIT)：MM
	版本 (REV)	A1	比例(SCALE)
品名 (ITEM NO)	USB A/F 6.8SMT（10.0）	日期 (DATE)	2021.10.12
料号 (PART NO)	YTC-USB-2410	设计 (DESIGN)	LUO
图号 (DWG NO)		审核 (CHECKED)	ROGER LI
		核准 (APPROVED)	ROC ZHAO

未 注 公 差
TOLERANCE UNSPECIFIED

X.X	±0.30
X.XX	±0.20
X.XXX	±0.10
X°	±5°
X.X°	±2°

These drawings and specifications are Shenzhen Yiyuan Technology Co Ltd.The property should not be copied. Without Shenzhen Yiyuan Technology Co. Ltd.Prior written consent to copy or use in any way