RoHS

REV.	ECN.#	DESCRIPTION	DATE
A0		NEW RELEASE	2021.07.27

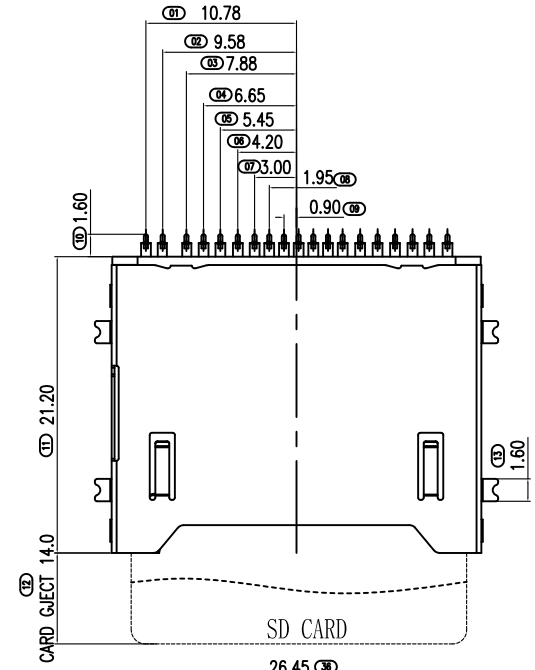

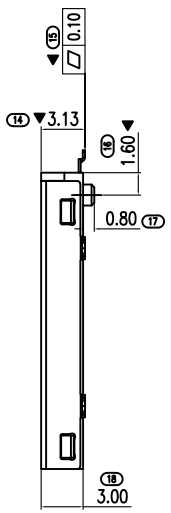

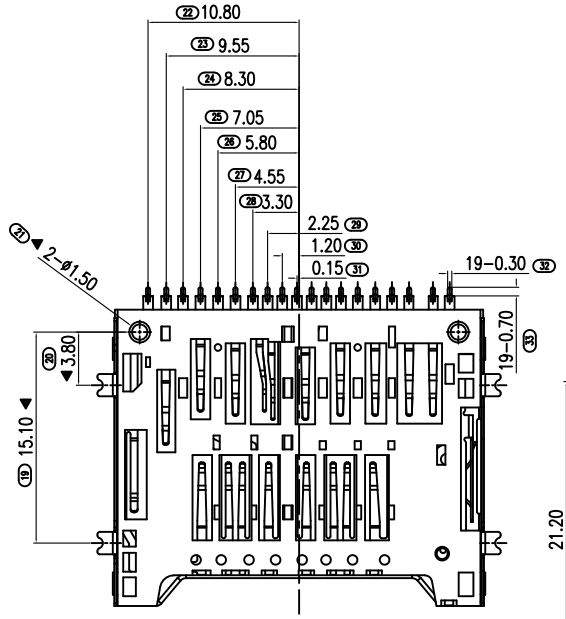

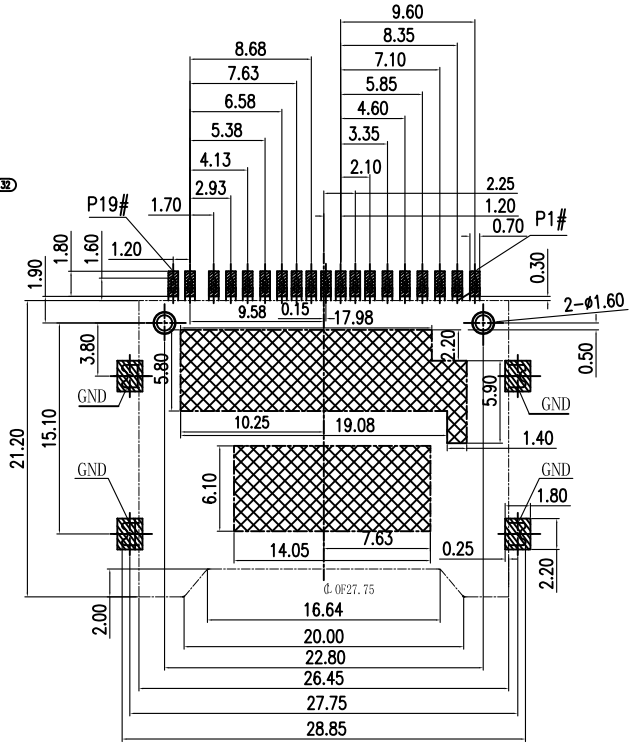

RECOMMEENDER PCB LAYOUT
TOLERANCE UNLESS OTHERWISE IS ±0.05

:PAD AREA
:GND PATTERN ONLY
:KEEP OUT AREA
:NO COPPER AREA (NO Trace&Via&GND)

NOTES:
MATERIAL:
Insulator: High Temperature Thermoplastic(Lcp),
Contact: Copper Alloy(C5191)
Shell: STAINLESS(SUS 304)
PLATING:
Contact: Plated Ni , contact point gold plated G/F, welding feet Matte tin
Shell: Plated Ni Overall Plated G/F Selective Contact Area
Electrical:
1. All Dimensions are in Millimeters.
2. Operation voltage: 10 VAC max.
3. Current rating : 1 Amps max.
4. Contact resistance: 100m ohms max.
5. Insulation resistance: 1000M ohms min. 500 VDC
6. Dielectric withstanding voltage: 500 VAC / 1minute
7. Opterating Temperature: -20° C to +60° C
8. Storage Temperature: -40° C to +70° C
9. Durability 5000 cycles.

PIN DEFINE:

PIN#	NAME	DESCRIPTION	PIN#	NAME	DESCRIPTION
1	VSS3	GROUND	11	VDD1	SUPPLY VOLTAGE
2	DAT2	DATA LINE BIT2	12	D1-	DIFFERENTIAL DATE 1-
3	D0+	DIFFERENTIAL DATE 0+	13	CLK	CLOCK
4	CD/DAT3	CARD DETECT/DATA LINE BIT3	14	D1+	DIFFERENTIAL DATE 1+
5	D0-	DIFFERENTIAL DATE 0-	15	VSS2	SUPPLY VOLTAGE GROUND
6	CMD	COMMAND/RESPONSE	16	VSS5	GROUND
7	CD	CARD DETECT	17	DAT0	DATA LINE BIT0
8	VSS1	SUPPLY VOLTAGE GROUND	18	DAT1	DATA LINE BIT1
9	VSS4	GROUND	19	WP	WRITE PROTECT
10	VDD2	SUPPLY VOLTAGE(1.8V)			

CARD DETECT	7# 8# CARD OUT	7# 8# CARD INSERT
WRITE PROTECT	19# GND WRITE PROTECTED	19# GND# WRITE ENABLE

MILLIMETERS	INCH
X. ± 2°	X.° ± 2°
.X ± 0.30	.XX ±0.012
.XX ± 0.20	.XXX ±0.008
.XXX ± 0.10	.XXXX±0.004

MINTRON TECHNOLOGY CO.,TLD.

品名: TITLE	SD 4.0板上 NO PUSH 卡座		制图: DRAWING	JOE	2021.07.27
料号: PART NO	MT102014992		审核: CHECKED		
三角视图 PROJ.	页次: PAGE 1/2	单位: UNIT mm	核准: APPROVED		
	图幅: A4	比例: 1:1	识别码: DIS NO.		