REV	CONTENT	CHK	DATE
V0.0	CONTENT	YL	22.11.19

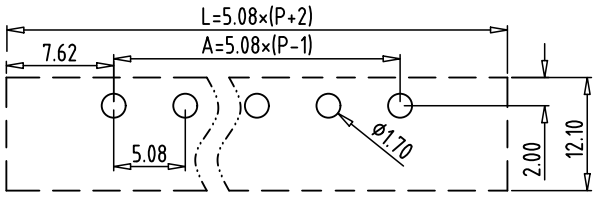

PCB LAYOUT

Electrical :

	UL	IEC
1.Rated Voltage :	300V	320V
2.Rated Current :	15A	20A

3.Withstanding Voltage : AC1600V/1Min;
4.Operating Temperature : -40°C~+105°C;
5. RoHS Compliance;
6.Safty Approval : cULus CE
7."★ " is the key quality control point.

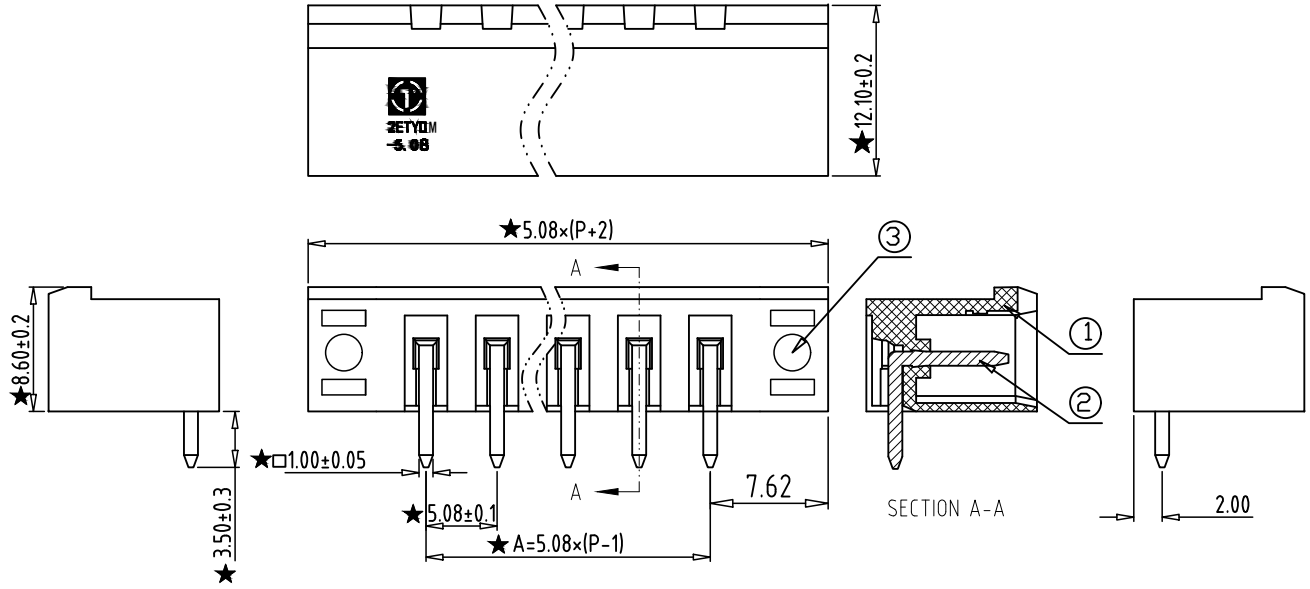

2ETYRM - 5.08 -XXP - X X - 100AH

① ② ③ ④ ⑤ ⑥

① Sereies No.

② Pitch

③ Poles
02 02Contacts
03 03Contacts
...
24 24Contacts

④ 1 Single Pitch
2 Double Pitch

⑤ Color: 1 Grey
2 Blue
3 Black
4 Green
5 Orange
6 Red
7 Transparent
8 Yellow
9 White

⑥ Customer Request: 100--Standard

3	NUT	XX	2	BRASS	--
2	PIN	XX	P	BRASS	Tin Plated
1	HOUSING	XX	1	PA66 UL94V-0	GREEN
ITEM	NAME OF PART	NO. OF PART	Q"TY	MATERIAL	NOTE

DWG.	YL	DATE	22.11.19	SIZE	A4	UNITS mm	SHEET/OF 1 / 1
CHK.		DATE		SCALE	1:1		
APP.		DATE		NAME	2ETYRM-5.08-XXP-XX-100AH		
拓宜(上海)工控电器设备有限公司 Topone(Shanghai) Industrial Control Electrical Equipment Co., LTD.				DWGNO.	XXXX		

Total Pitch Tolerances in mm									Nominal dimension range in mm									⊥		≒	—		//
over 0 to 30	over 30 to 53	over 53 to 70	over 70 to 90	over 90 to 115	over 115 to 150	over 150 to 250	over 250 to 350	over 350 to 500	over 0 to 30	over 30 to 53	over 53 to 70	over 70 to 90	over 90 to 115	over 115 to 150	over 150 to 200	over 200 to 250	over 250 to 320	over 0 to 10	over 10	all	over 0 to 100	over 100 to 150	over 150
±0.18	±0.20	±0.25	±0.3	±0.35	±0.44	±0.60	±0.70	±0.85	±0.20	±0.25	±0.30	±0.35	±0.44	±0.55	±0.70	±0.80	±0.90	0.2	0.3	0.3	0.2	0.3	0.5