REV.	ECN NO.	REVISED	DATE

RoHs 环保

A型

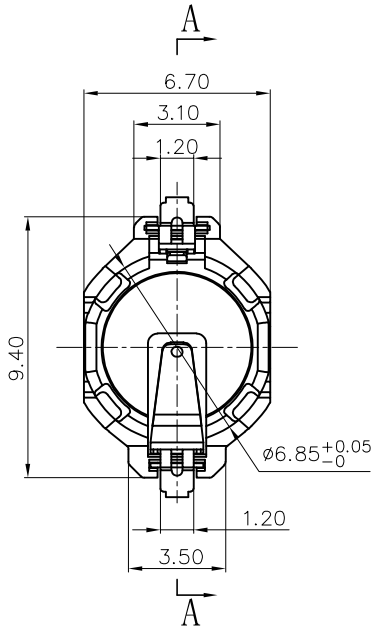

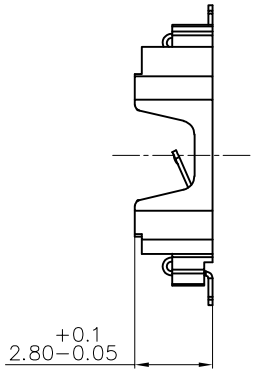

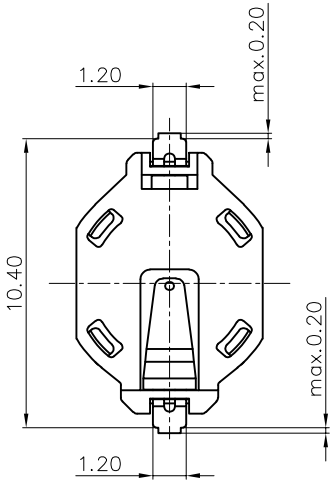

NOTE:

1.MATERIAL:

a.HOUSING:LCP UL94V−0 WHITE

b.CONTACT:PHOSPHOR BRONZE

(SURFACE PLATING: Au1u")

SEE ORDERING INFORMATION

2.ELECTRIC:

a.CONTACT RESISTANCE: 30 MILLIOHMS MAX

b.INSULATION RESISTANCE: 100 MEGA OHMS MIN

c.DIELECTNIC VOLTAGE: 500V AC ONE SEC LEVEL

d.OPERATING TEMPERATURE: −25° C~ +85° C

ORDERING INFORMATION

BS−621−B4AA001

电池座系列

BS−621系列

SMT 180° TYPE

PLATING:
A−Au1U"
A1−Au1.3U"
J−Ni100U"~120U"
K−Sn100U"~120U"

MATERIAL:
1A−PBT BLACK
1B−PA66 BLACK
2A−PPA BROWN
2B−PPA BLACK
2C−PPA BLACK (AS SAMPLE)
2D−PPA ADJUSTED COLOR
2E−PPA WHITE
3A−PPS BROWN
3B−PPS BLACK
3C−PPS ADJUSTED COLOR
4A−LCP WHITE
4B−LCP BLACK

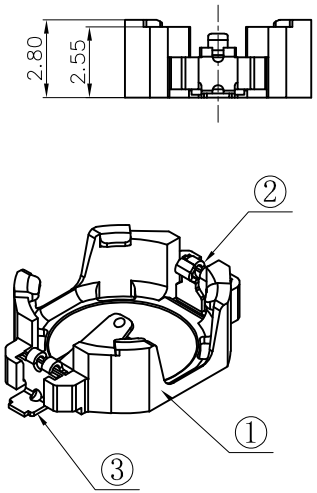

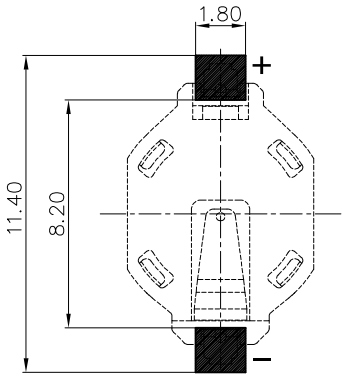

PCB Layout Diagram
Bottom View

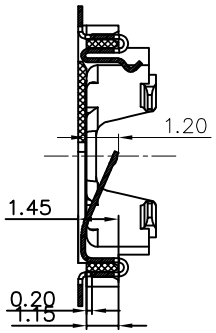

A−A SECTION

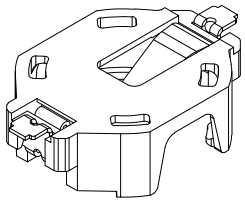

工程部
2021−12−14
LQ. HUANG

NO.	PART NAME	Q'TY	MATERIAL	PLATING & COLOR
3	TERMINAL−	1	PHOSPHOR BRONZE, T=0.15mm	Au(1u")−Plating
2	TERMINAL+	1	PHOSPHOR BRONZE, T=0.15mm	Au(1u")−Plating
1	HOUSING	1	LCP UL94 V−0	WHITE(NATURAL)

UNLESS OTHERWISE SPECIFIED TOLERANCES

DECIMALS: X :±0.30, X.X :±0.25, X.XX :±0.20, X.XXX :±0.10

ANGLES: X :±1°, X.X :±0.5°

WEIGHT:

SHEET 1 OF 1

MYOUNG 美阳 www.meiyangdz.com

DSND	YangFeng	DATE	2021−12−14
CHKD	ZhouRuicai	DATE	2021−12−14
APVD	XueShunyong	DATE	2021−12−14
SCALE:	SIZE: A4	VIEW:	
UNIT: mm	REV.: A/0	OBJECT: MY	

TITLE: 电池座BS−621−1 Au SMT

PART NO.: BS−621−B4AA001

DRAW NO.:MY−CP−0287