修订 REV	标记 MARK	修改摘要 REVISION DESCRIPTION	签名 SIGNATURE	日期 DATE
AO		NEW DWG		2016-03-12

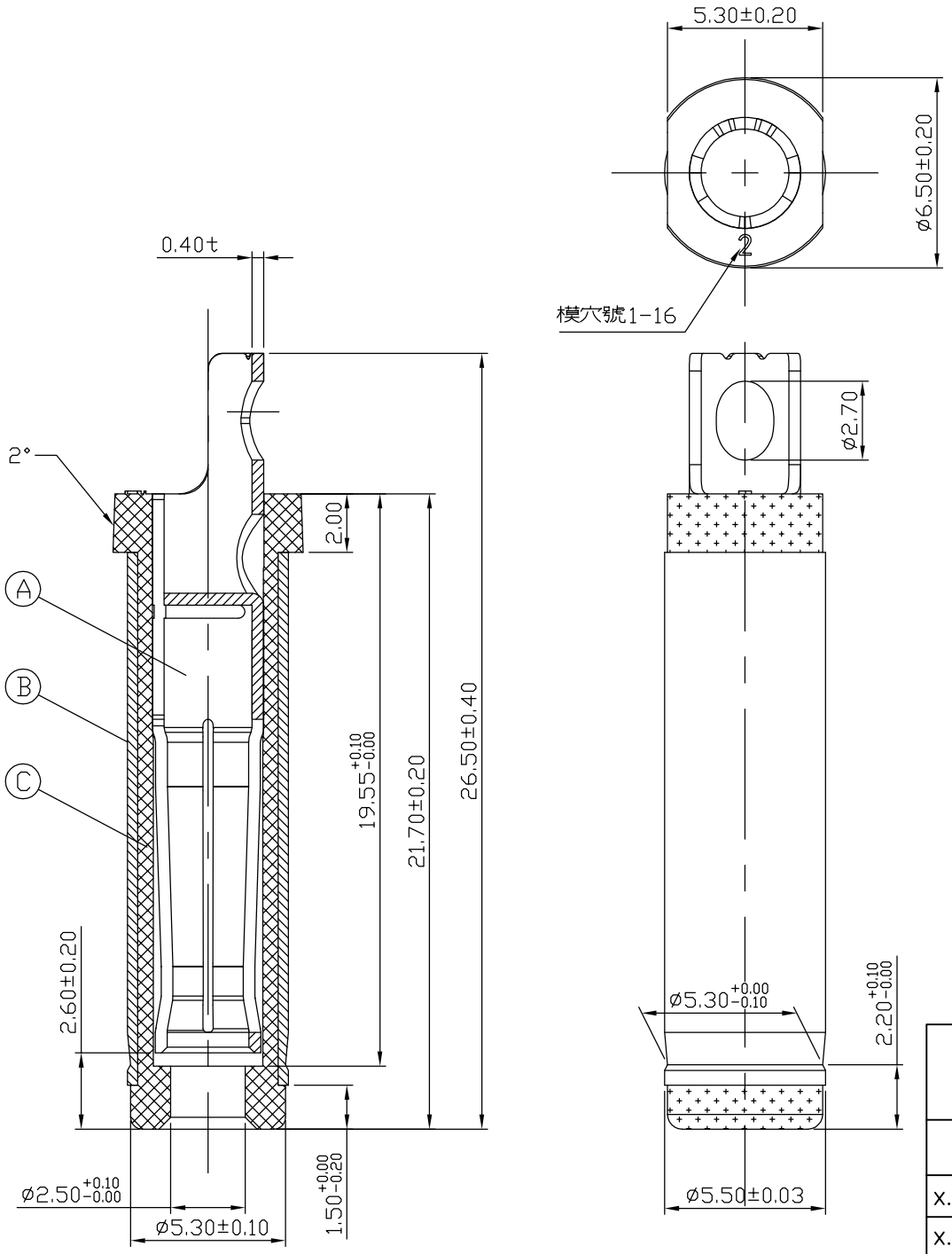

SPECIFICATIONS:
1.Dielectric Strength:550V DC/1 minute.
2.Insulation resistance:100M Ohms MIN.(AT 500V DC).
3.Contact Resistance:10mΩ Max.INITIAL(pin+&spring-)
20m ΩMax.LIFE TEST AFTER(pin+&spring-)
4.HALOGEN FREE PRODUCT IDENTIFICATION LABEL ON PACKAGING
5.FOR HAND SOLDERING LEAD-FREE PROCESS.
6.CURRENT RATING:20V/20A

ITME	DESCRIPTION	MATERIAL	TREATMENT	Q'TY
C	INSULATOR	PBT+30%GF 94V-0	COLOR:BLACK	1
B	SLEEVE	BRASS C3604 T0.35	NICKEL(60μ"MIN)	1
A	□ TYPE TERMINAL	C18400 T0.4	GOLD FLASH(0.7-1.5μ")	1

深圳市华德共创科技有限公司
Shenzhen Huade co-create Technology Co.,LTD
电话：0755-23304126 传真：0755-29940187

-TOLERANCES-
UNLESS OTHERWISE SPECIFIED
公差参数表

X.X	±0.30	X.X°	±3°
X.XX	±0.20	X.XX°	±2°
X.XXX	±0.10	X.XXX°	±1°

APPD: 核准:
CHECK: 校对: 王建业
DRAW: 绘图: 黄艳兰

TITLE: 产品名称: DC电源插头 ø5.5Xø2.5
PART NO: 产品编号: DP550250-0188-6H

DATE	SCALE	UNIT	CODE NUMBER
2016-03-12	1:1	mm	A001