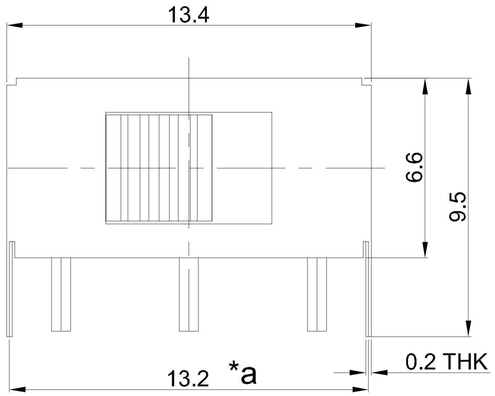


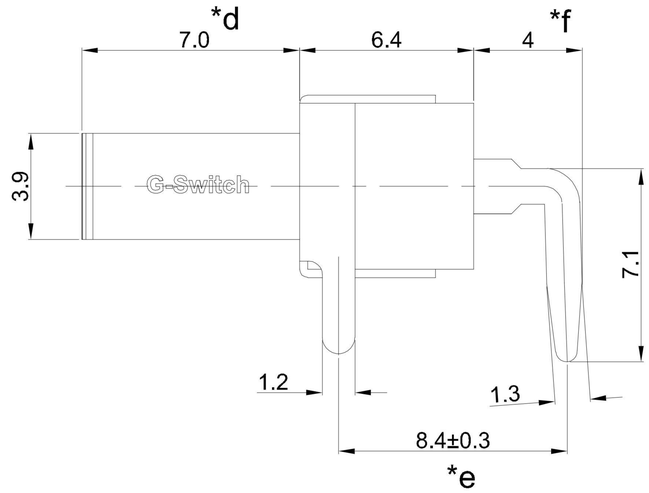

SS-12D11-G070

**Straight shank**

**G-Switch P/N**

**Switch Height** (mm)
G020=2.0mm G030=3.0mm
G040=4.0mm G050=5.0mm
G060=6.0mm G070=3.0mm
G080=8.0mm G090=9.0mm
G100=10.0mm

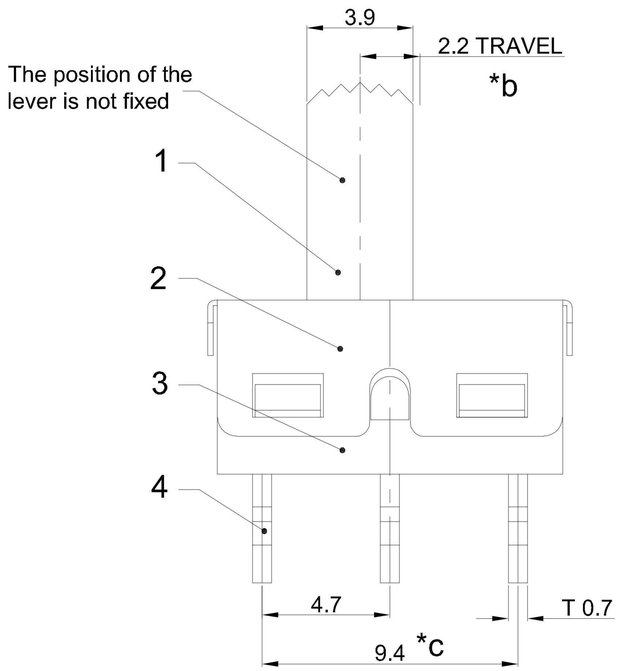


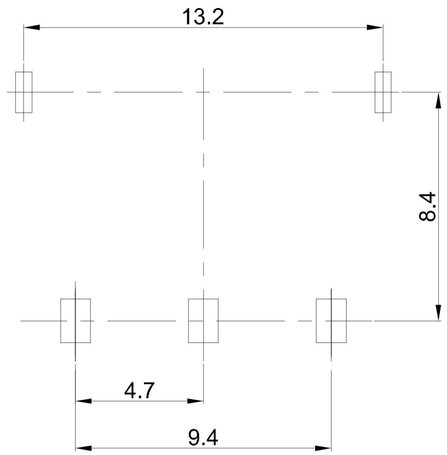


RECOMMENDED PCB LAYOUT
TOLERANCE:±0.05

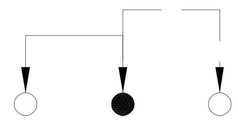

CIRCUIT DIAGRAM

**G-Switch Specification:**

1.Operating temperature range: -40°C ~ +85°C
2.Rating: 3A.50V AC
3.Insulation resistance: 100MΩ min.100V DC
4.Dielectric strength: 500V AC for 1 min
5.Contact resistance: 30mΩ max.
6.Terminals arrangement: 1P2T
7.Travel: 2.2±0.1mm
8.Switch lifetime: 10,000 Cycles
9.Operating force: 250±100gf

| NO. | PART NAME | MATERIAL | REMARK |
|---|---|---|---|
| 6 | STEEL BALL | STEEL | NATURAL |
| 6 | SPRING | STEEL WIRE | NATURAL |
| 5 | CONTACT | BRASS STRIP | Ag PLATED |
| 4 | TERMINAL | BRASS STRIP | Ag PLATED |
| 3 | CASE | PA9T | BLACK |
| 2 | COVER | SUS | NATURAL |
| 1 | KNOB | PA9T | BLACK |

Note: "*" represents the critical size (6 pieces)

Pb Process Capable

RoHS Compliant EU RoHS Standards

HALOGEN Compliant Halogen Free

| | | | | | | | |
|---|---|---|---|---|---|---|---|
| SCALE: 1:1 | UNIT: mm | Title: | Horizontal Slide Switch DIP 13.4×6.6×6.4mm | | | | |
| SIZE: A4 | | | | | | | |
| Unless otherwise General Tolerance: | | Molde Code: | SS-12D11-G070 | | | | |
| >1.5 ±0.20 | | DRAWN | CHECKED | APPROVED | DATE | REV: A0 | SHEET: 1/1 |
| <1.5 ±0.10 | | Xia | Chen | Chen | 2023.02.01 | | |
| X° ±5° | | | | | | | |

品赞科技 b-Switch ®
www.dg-switch.com