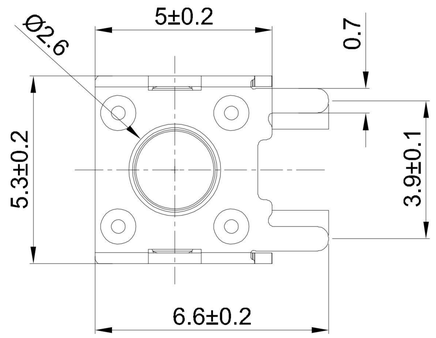

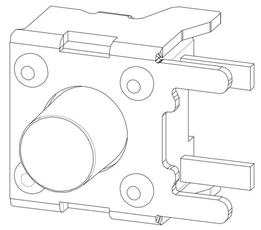

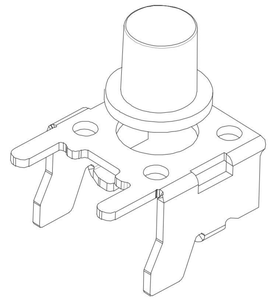

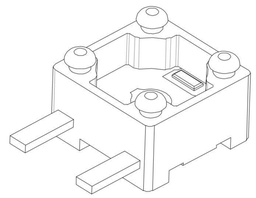

GT-TB092B-H100-L1

G-SWITCH

Operating Force
A=160gf
B=250gf
C=100gf

Switch Height
H038=3.8 H043=4.3
H050=5.0 H055=5.5
H060=6.0 H065=6.5
H070=7.0 H075=7.5
H080=8.0 H085=8.5
H090=9.0 H095=9.5
H100=10.0 H105=10.5
H110=110mm

Switch Lifetime (Force)
L1=100,000 Cycles
L3=300,000 Cycles

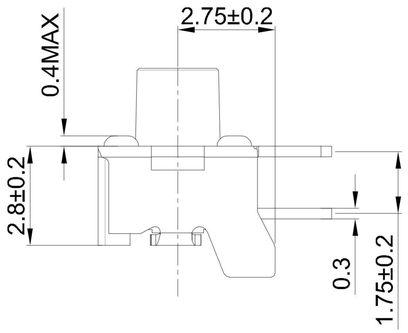

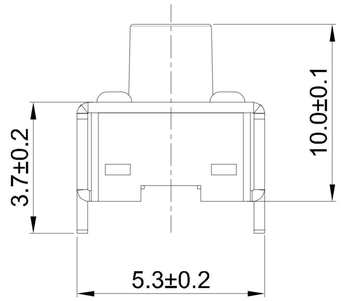

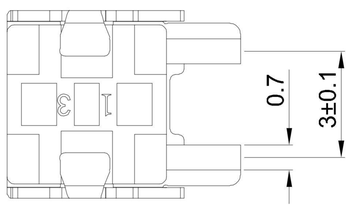

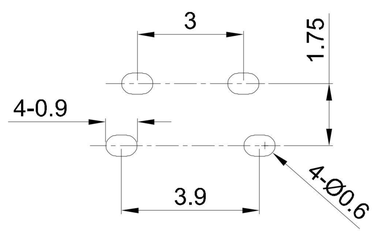

RECOMMENDED PCB LAYOUT

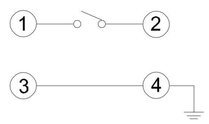

CIRCUIT DIAGRAM

G-Switch Specification:
1.Operating temperature range: -40°C ~ +85°C
2.Rating: 50mA.12V DC
3.Insulation resistance: 100MΩ min.100V DC
4.Dielectric strength: 250V AC for 1 min
5.Contact resistance:100mΩ max.
6.Travel: 0.2±0.05mm

NO.	PART NAME	MATERIAL	REMARK
1	STEM	HIGH TEMPERATURE PLASTIC	BLACK
2	SUPPORT	STAINLESS STEEL	Tin PLATING
3	REED	STAINLESS STEEL	Ag PLATING
4	CASE	HIGH TEMPERATURE PLASTIC	BLACK
5	TERMINAL	COPPER ALLOY	Ag PLATING

Pb Process Capable

RoHS Compliant 2002/95/EC

HALOGEN Compliant Halogen Free

SCALE: 1:1	UNIT: mm	Title:	Horizontal Tact Switch DIP 5.3×5.0×10.0mm
SIZE: A4		Molde Code:	GT-TB092B-H100-L1

Unless otherwise General Tolerance:

X.	±0.30
X.x	±0.20
X.xx	±0.15
X.xxx	±0.10
Angles	±3°

DRAWN	CHECKED	APPROVED	DATE	REV:	SHEET:
Xia	Chen	Chen	2023.02.01	A0	1/1

品赞科技 b-Switch ®