KYCON, Inc. 305 Digital Drive, Morgan Hill, CA 95037 (408)494-0330

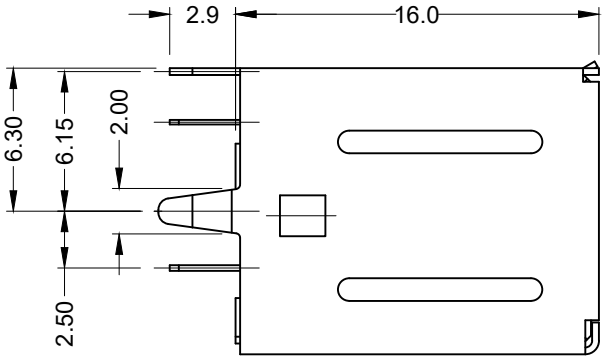

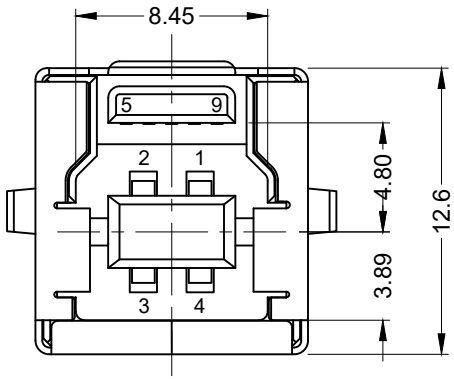

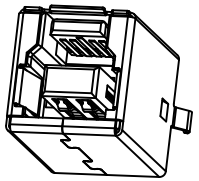

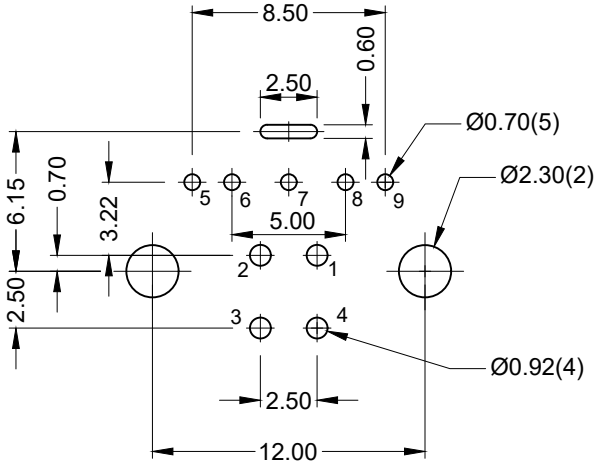

Recommended PCB Layout
(Top View)

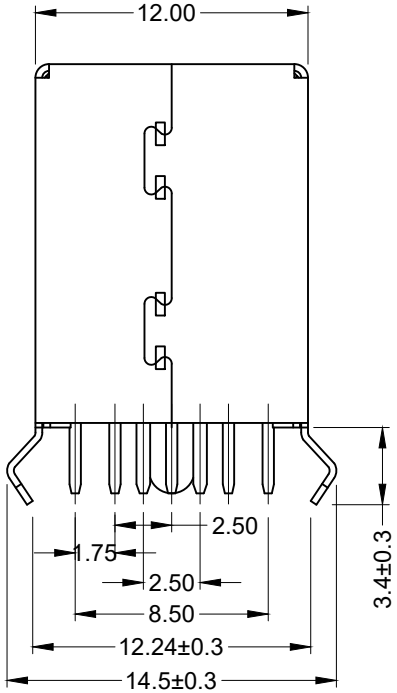

Pin Number	Signal Name
1	VBUS
2	D-
3	D+
4	GND
5	StdB_SSTX-
6	StdB_SSTX+
7	GND-DRAIN
8	StdB_SSRX-
9	StdB_SSRX+

Material and Finish

Insulator: PBT+30%GF UL94V-0
Color: Blue

Contact A (4 Pin): Phosphor Bronze;

Contact B(5 Pin): Brass;

Plating Options:

30 Option: 30u" Gold plating over Nickel on contact area; Tin Plating on Solder Tail.

Shell: Brass; Nickel Plating

Electrical Specification

Current Rating:
1.8 Amp

Insulation Resistance:
100 Megohm Min.

Contact Resistance:
50 milliohm Max.

Dielectric Withstanding Voltage:
100V AC Min

Mechanical Characteristics

Insertion Force:
2.5Kg Max

Withdrawal Force:
1.0-2.5Kg

Durability:
5000 Cycles

Operating Temperature:
-40°c to +85°c.

RoHS COMPLIANT

Tolerances
X.X ± 0.35
X.XX ± 0.25
Unless Stated Otherwise

REV.	DATE	DESCRIPTION	REV. BY	CHK. BY
A3	08/25/11	ECO #11-058	S. Vien	H. MA
A4	05/08/13	ECO #13-020	W. Cook	P. DalCanto
A5	01/28/15	Update Description	H. MA	C. Furumasu
A6	03/02/17	Add Dimensions	G. Serrato	W. Cook
A7	03/09/17	ECO#17-006	H. MA	W. Cook
A8	01/05/21	ECO #21-001	C. Kelleher	C. Furumasu

DRAWN BY	DATE
S. Vien	09/20/10
	UNITS
	mm

KUSBVX-BS1N9-BL30

Vertical Type B Receptacle

USB 3.2 Gen 1, Blue, Through Hole

KYCON