CATEGORY	DESCRIPTION	P/N #
CONNECTOR	RJ45 2x2 port 8P8C Connector(简易款)	MJ5988B-XX22-HPRD2

REV.	ECN NO	DESCRIPTION	REVISED	DATE
A01	————	New Release	Luke	2020.11.19

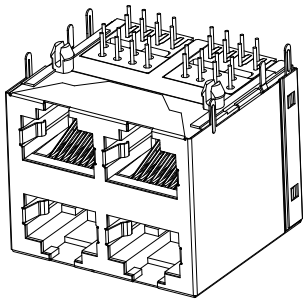

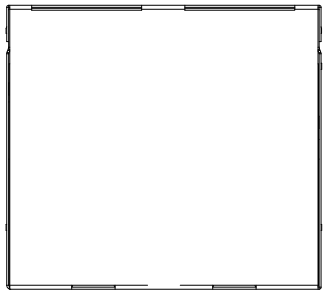

1.RJ ELECTRICAL CHARACTERISTICS
- 1-1:VOLTAGE:125V AC RMS
- 1-2:CURRENT RATING:1.5A
- 1-3:CONTACT RESISTANCE:40mΩ MAX.
- 1-4:INSULATION RESISTANCE:500MΩ MIN.
- 1-5:DIELECTRIC WITHSTANG VOLTAGE :1000V AC
- 1-6:OPERATURE TEMPERATURE:-40°C~80°C

MJ5988B-XX22-HPRD2

X	HOSUING COLOR
B	BLACK

X	Terminal Plating
0	Au G/F Plating
1	Au 3u" Plating
2	Au 6u" Plating
3	Au 15u" Plating
4	Au 30u" Plating
5	Au 50u" Plating

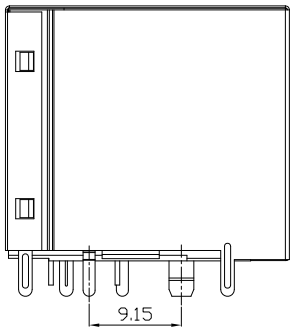

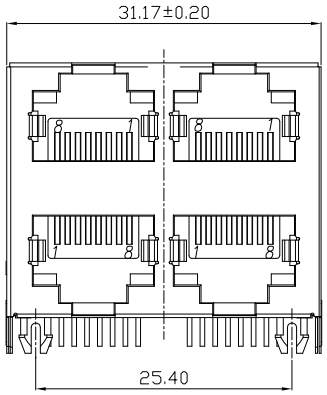

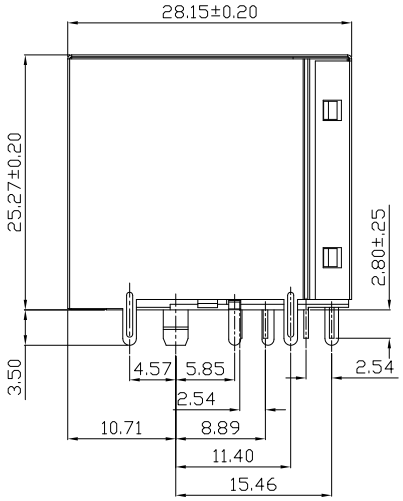

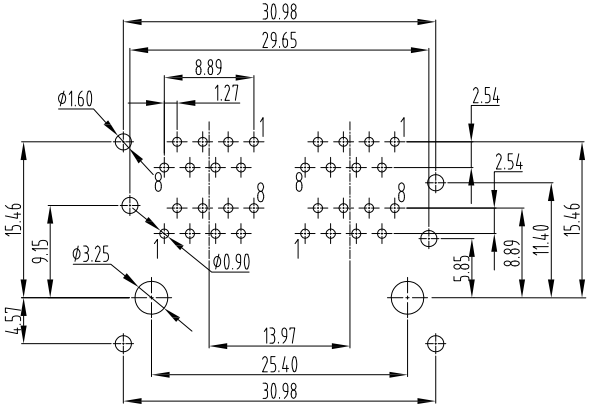

PCB LAYOUT/TOP VIEW

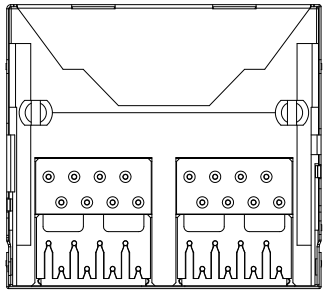

東莞市合陵電子有限公司
DongGuan HeLing Electronic Co.,LTD

d	Terminal	32	PHOSPHOR BRONZE Ø0.46mm	Au Plating	
c	Insert	4	PBT UL94V-0	Black	
b	Shell	1	BRASS T=0.20mm	NI Plating	
a	Housing	1	PBT UL94V-0	Black	
NO.	PART NAME	Q'TY	MATERIAL	PLATING & COLOR	Remark

UNLESS OTHERWISE SPECIFED TOLERANCES

DECIMALS: X :±0.5, X.X :±0.3, X.XX :±0.2

ANGLES: X :±2°, X.X :±1°

SCALE:1/1	UNIT: mm	DWG.NO:
SIZE: A3	PAGE:1 OF 1	REV:A01

APPROVED BY	CHECKED BY	PREPARED BY
DICK	XSY	Luke

CUSTOMER COPY