Jan.1.2024 Copyright 2024 HIROSE ELECTRIC CO., LTD. All Rights Reserved.
In case of consideration for using Automotive equipment / device which demand high reliability, kindly contact our sales window correspondents.

	COUNT	DESCRIPTION OF REVISIONS	BY	CHKD	DATE		COUNT	DESCRIPTION OF REVISIONS	BY	CHKD	DATE
△					. .	△					. .
△					. .	△					. .
△					. .	△					. .

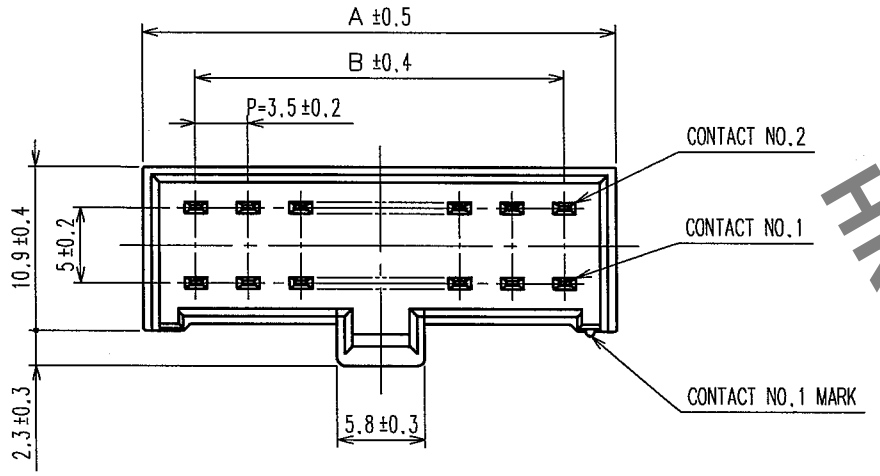

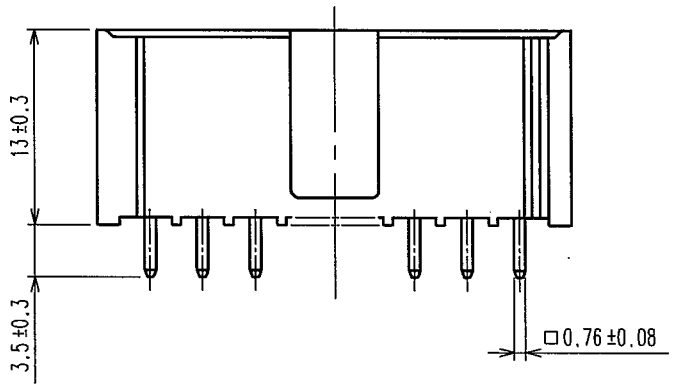

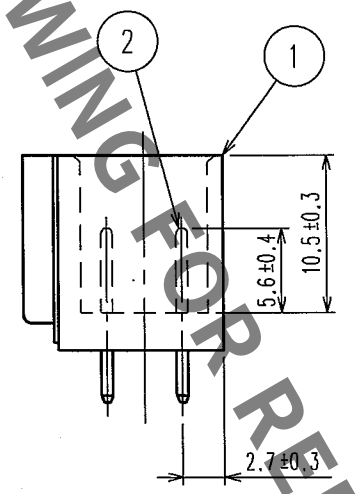

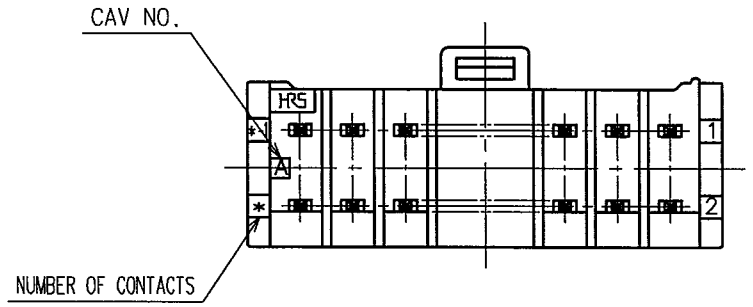

CODE NO.	PART NO.	NUMBER OF CONTACTS	A	B
CL547-0083-2-05	MDF6- 4DP-3.5DSA(05)	4	10.5	3.5
CL547-0084-5-05	MDF6- 6DP-3.5DSA(05)	6	14.0	7.0
CL547-0085-8-05	MDF6- 8DP-3.5DSA(05)	8	17.5	10.5
CL547-0086-0-05	MDF6-10DP-3.5DSA(05)	10	21.0	14.0
CL547-0087-3-05	MDF6-12DP-3.5DSA(05)	12	24.5	17.5
CL547-0088-6-05	MDF6-14DP-3.5DSA(05)	14	28.0	21.0
CL547-0089-9-05	MDF6-16DP-3.5DSA(05)	16	31.5	24.5
CL547-0090-8-05	MDF6-18DP-3.5DSA(05)	18	35.0	28.0
CL547-0091-0-05	MDF6-20DP-3.5DSA(05)	20	38.5	31.5

HRS DRAWING FOR REFERENCE

NOTE 1 : RECOMMENDED PC BOARD HOLE DIAMETER $\phi 1.3^{+0.1}_{0}$

NO.	MATERIAL	FINISH, REMARKS
1	POLYAMIDE	WHITE, UL94V-0
2	BRASS	SURFACE:TIN-COPPER PLATED 1μm min UNDER PLATING:NICKEL 0.5μm min

CODE NO.(OLD)	DRAWN	DESIGNED	CHECKED	APPROVED	RELEASED
CL	M.Nakamoto '04.04.16	H.Umehara '04.04.16	T.Ono 04.04.16	T.Ono 04.04.16	. .

SCALE 10: 1
UNITS mm

DRAWING NO. EDC3-160046-10

HRS HIROSE ELECTRIC CO., LTD

PART NO. MDF6-*DP-3.5DSA(05)

CODE NO. CL547-

1/1

FORM NO.229 (NC)

TO