REVISION A

DO NOT SCALE FROM THIS PRINT

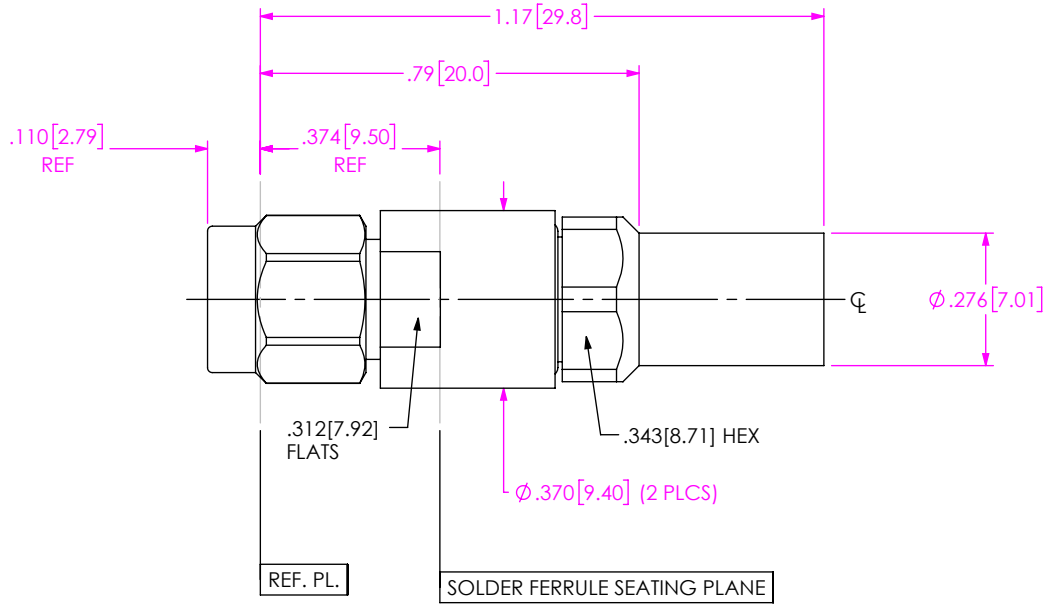


PRF92-P-C-EP-190-SS

- SERIES: -92: 2.92MM
- GENDER: -P: PLUG
- TYPE: -C: CABLE
- FINISH: -EP: 50µ" EXTRA HEAVY GOLD CENTER CONTACT, PASSIVATED OUTER CONTACT
- CABLE TYPE: -190: SEMFLEX HP190
- ORIENTATION: -S: STRAIGHT
- TERMINATION: S: SOLDER CLAMP

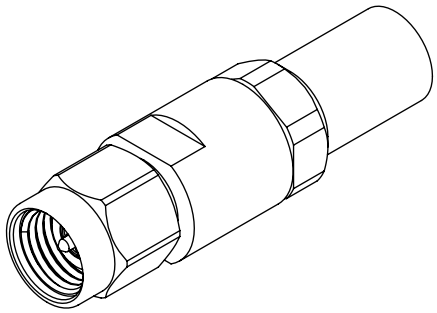

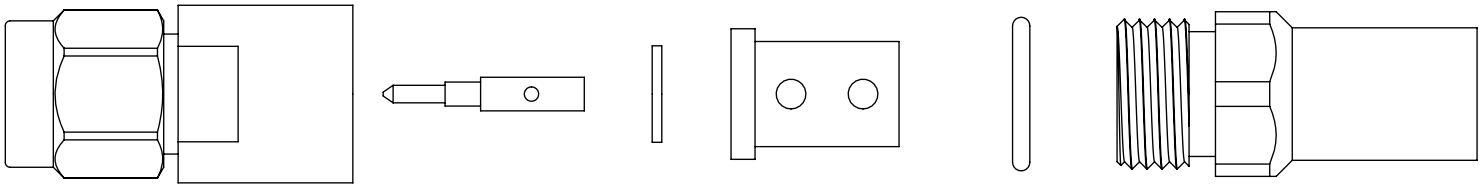

EXPLODED VIEW
NOT TO SCALE
(FOR CLARITY ONLY)

NOTES:

1. MATERIAL:
   BODY, CLAMP NUT, COUPLING NUT: STAINLESS STEEL
   CONTACT, LOCK RING: BERYLLIUM COPPER
   SOLDER FERRULE: BRASS ALLOY
   BEADS: PEI
   O-RING, GASKET: SILICONE RUBBER

2. FINISH:
   BODY, CLAMP NUT, COUPLING NUT: PASSIVATED
   CONTACT, SOLDER FERRULE: 50µ" MIN. GOLD OVER 50µ" MIN. NICKEL PLATE

3. PCI P/N: 3300

F:\DWG\MISC\MKTG\PRF92-P-C-EP-190-SS-MKT.SLDDRW

UNLESS OTHERWISE SPECIFIED, DIMENSIONS ARE IN INCHES.
TOLERANCES ARE:

| DECIMALS | ANGLES |
|---|---|
| .XX: ±.02[0.5] | 1° |
| .XXX: ±.005[0.13] | |
| .XXXX: ±.0005[0.013] | |


* PROPRIETARY NOTE *
THIS DOCUMENT CONTAINS CONFIDENTIAL AND PROPRIETARY INFORMATION AND ALL DESIGN, MANUFACTURING, REPRODUCTION, USE, PATENT RIGHTS AND SALES RIGHTS ARE EXPRESSLY RESERVED BY SAMTEC, INC. THIS DOCUMENT SHALL NOT BE DISCLOSED, IN WHOLE OR PART, TO ANY UNAUTHORIZED PERSON OR ENTITY NOR REPRODUCED, TRANSFERRED OR INCORPORATED IN ANY OTHER PROJECT IN ANY MANNER WITHOUT THE EXPRESS WRITTEN CONSENT OF SAMTEC, INC.



samtec
520 PARK EAST BLVD, NEW ALBANY, IN 47150
PHONE: 812-944-6733 FAX: 812-948-5047
e-Mail info@SAMTEC.com code 55322


MATERIAL: DO NOT SCALE DRAWING SHEET SCALE: 2.5:1

DESCRIPTION: 2.92MM PLUG FOR SEMFLEX HP190 CABLE

DWG. NO. PRF92-P-C-EP-190-SS

BY: CANDY W 05/10/2019 SHEET 1 OF 2

REVISION A

# CABLE APPLICATION VIEWS

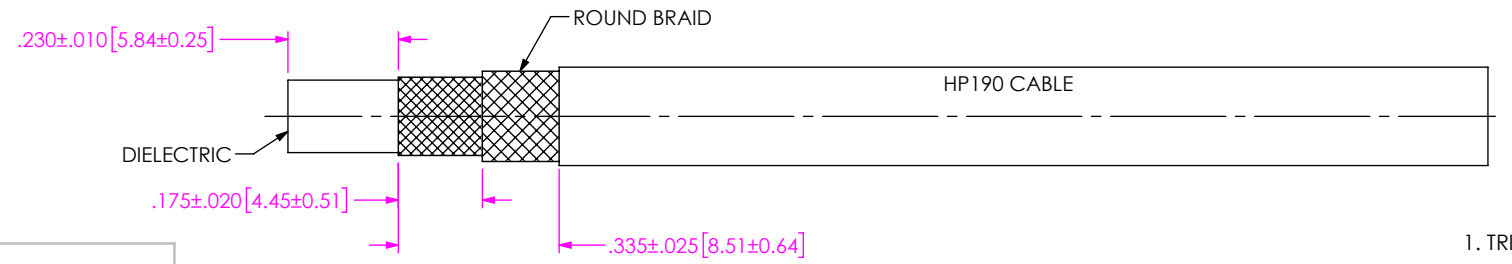


1. TRIM CABLE AS SHOWN.

IN-PROCESS VIEW 1

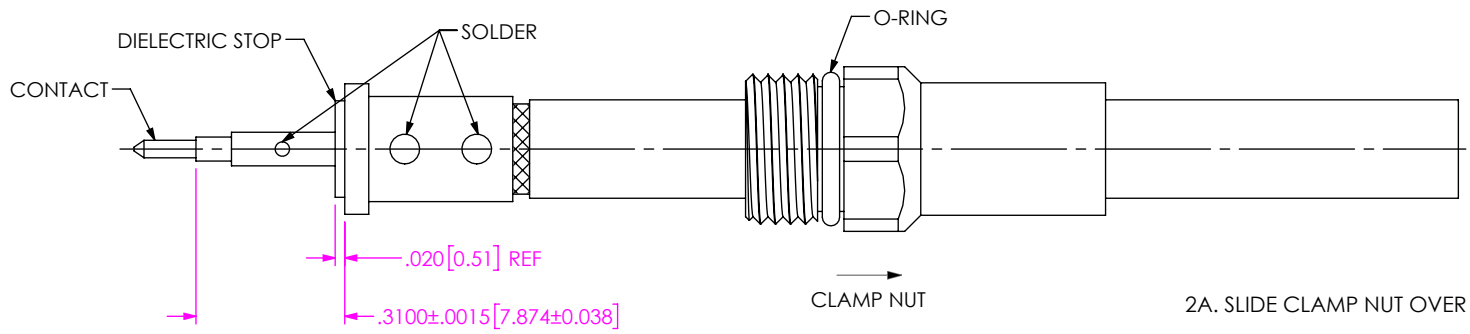


2A. SLIDE CLAMP NUT OVER CABLE IN ORIENTATION AS SHOWN.

2B. INSERT CABLE INTO SOLDER FERRULE UNTIL INNER BRAIDS SEAT AND SOLDER TO BRAIDS WHERE SHOWN.

2C. TRIM CABLE DIELECTRIC FLUSH WITH FACE OF FERRULE.

2D. SLIDE DIELECTRIC STOP OVER CABLE CENTER CONDUCTOR AND SOLDER CONTACT FLUSH TO STOP TO DIMENSION SHOWN.

IN-PROCESS VIEW 2

3. INSERT CABLE/CONTACT SUB-ASSEMBLY INTO CONNECTOR UNTIL SEATED AND TIGHTEN CLAMP NUT TO 25-35 IN-LBS.

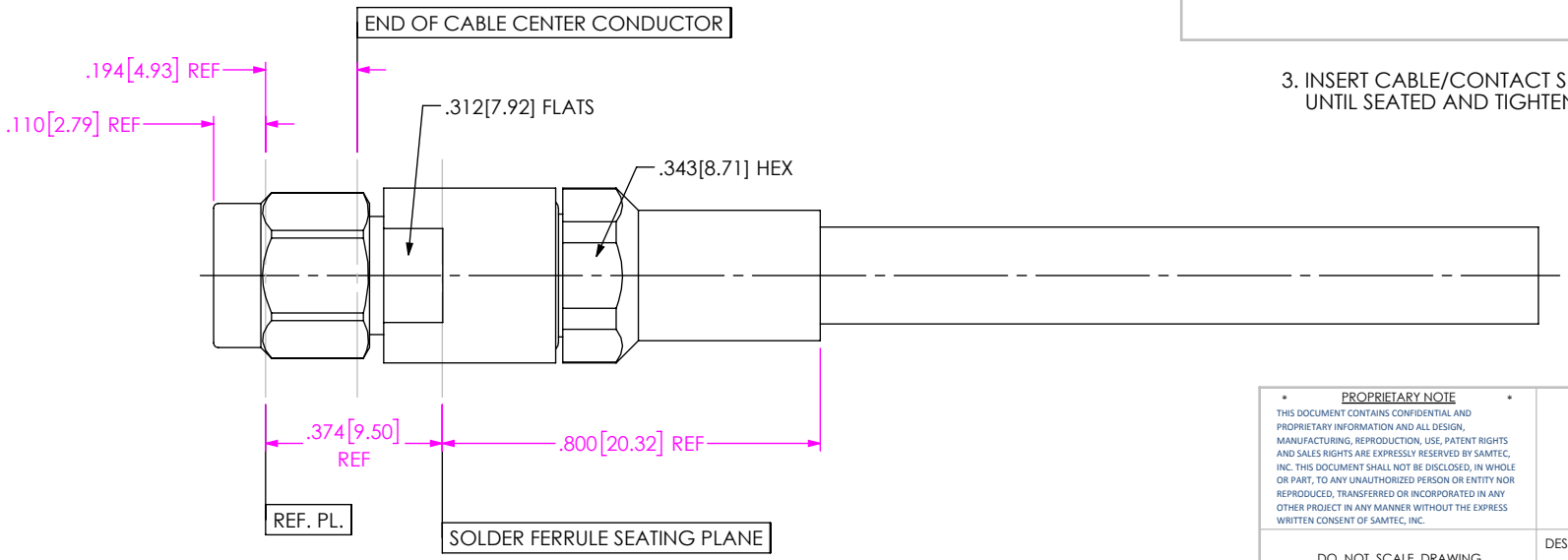


DISTANCE FROM END OF CABLE CENTER COND. TO REF. PL. IS .194 (REF.)

IN-PROCESS VIEW 3


PROPRIETARY NOTE

THIS DOCUMENT CONTAINS CONFIDENTIAL AND PROPRIETARY INFORMATION AND ALL DESIGN, MANUFACTURING, REPRODUCTION, USE, PATENT RIGHTS AND SALES RIGHTS ARE EXPRESSLY RESERVED BY SAMTEC, INC. THIS DOCUMENT SHALL NOT BE DISCLOSED, IN WHOLE OR PART, TO ANY UNAUTHORIZED PERSON OR ENTITY NOR REPRODUCED, TRANSFERRED OR INCORPORATED IN ANY OTHER PROJECT IN ANY MANNER WITHOUT THE EXPRESS WRITTEN CONSENT OF SAMTEC, INC.



samtec

520 PARK EAST BLVD, NEW ALBANY, IN 47150
PHONE: 812-944-6733 FAX: 812-948-5047
e-Mail info@SAMTEC.com code 55322


DO NOT SCALE DRAWING

SHEET SCALE: 2.5:1

DESCRIPTION: 2.92MM PLUG FOR SEMFLEX HP190 CABLE

DWG. NO. PRF92-P-C-EP-190-SS

BY: CANDY W 05/10/2019 SHEET 2 OF 2

F:\DWG\MISC\MKTG\PRF92-P-C-EP-190-SS-MKT.SLDDRW