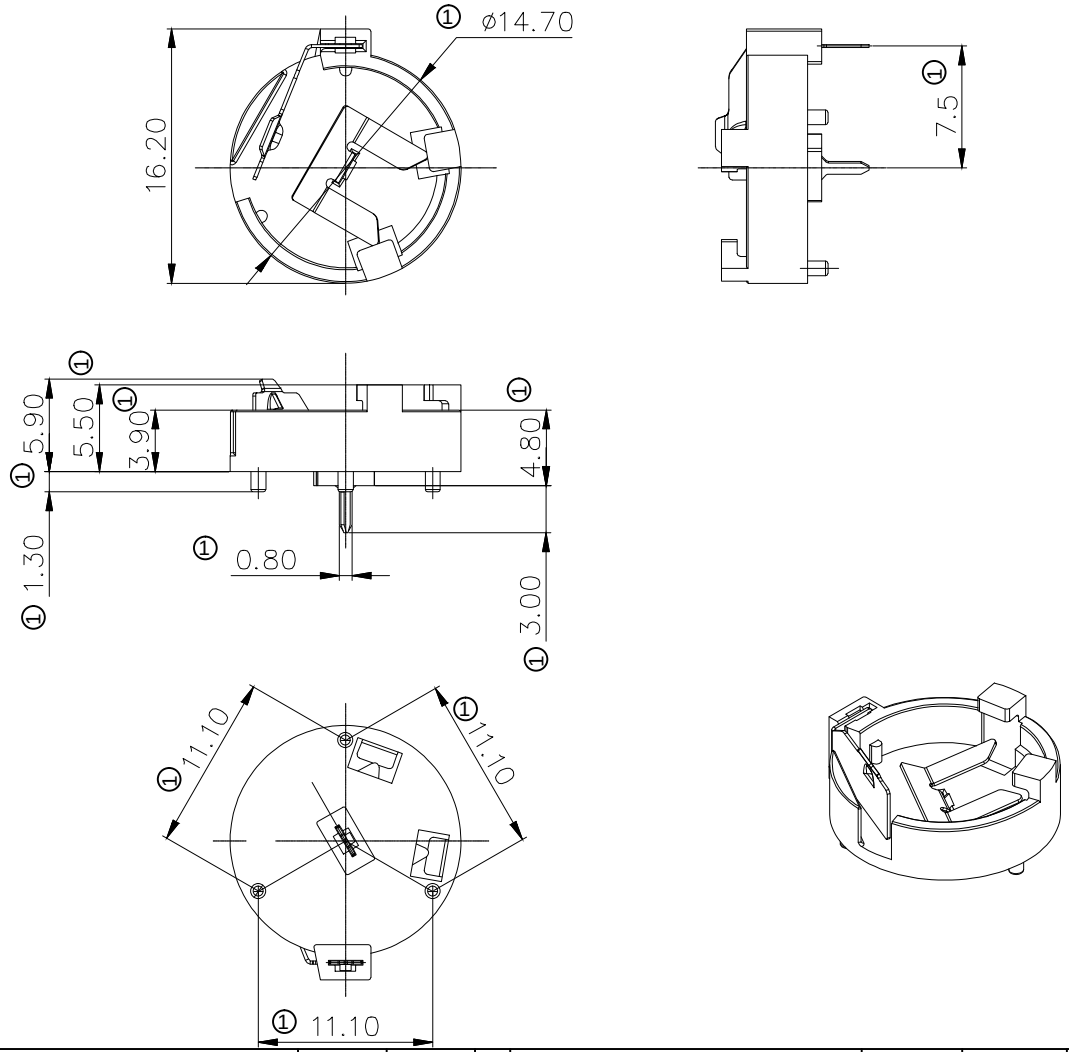

NOTE:

1.MATERIAL
1.1 Housing:PBT
1.1 Contact:CR1225,Au or Tin over Nickel

2.ELECTRIC
2.1 Contact Resistance:30 Milliohms Max.
2.2 Insulation Resistance:1000 Mega Ohms Min.
2.3 Dielectnic Voltage:500V AC one Sec Level

3.Operating Temperature:-55°C To +105°C
4.Packing:Tray

Order Code:A-BAT-CH-C2-EA-xTP1
G:Gold Flash
Z:Tin

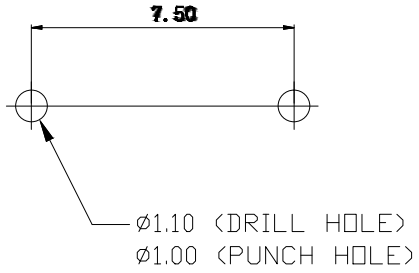

PCB LAYOUT

RoHS compliant
unit:mm

Scale	Free
TOLERANCE	
X.	±0.35
.X	±0.25
.XX	±0.20
.XXX	±0.15
DIM	TOL
Angle	TOL

Id.	modification	Date	Name
1	Update the dimensions	12.06.2023	Winnie
0	Drawn	12.15.2021	Peter

	Date	Name
Drawn	12.15.2021	Peter
Approved	12.06.2023	Winnie

ASSMANN WSW components

Description: Coin Cell Holders CR1225 Type

ASSMANN WSW-NO.
A-BAT-CH-C2-EA-xTP1

Drawing-No.
ASS 9144 CO

rev01

Customer-No.

SHEET 1 / 1

SV5043