DB UNLIMITED

Part Number:	DRAWN	
MM042602-5	CJ	4/25/2016
	CHECKED	
	P.D	4/25/2016
Description:	APPROVED	
Digital MEMS Microphone	J.S	4/25/2016

This document contains data proprietary to DB Unlimited. Any use or reproduction, in any form, without prior written permission of DB Unlimited is prohibited. All terms and conditions can be found at www.dbunlimitedco.com

Top View

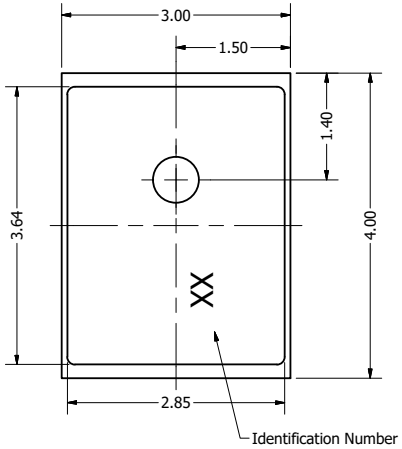

Side View

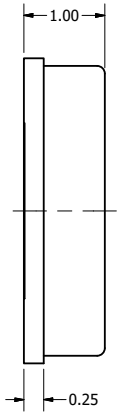

Bottom View

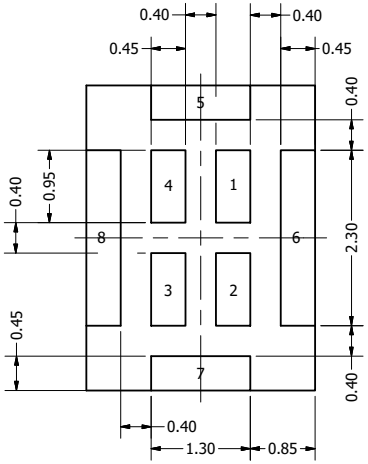

PIN 1	PIN 2	PIN 3	PIN 4	PIN 5	PIN 6	PIN 7	PIN 8
CLOCK	OUTPUT	VDD	LR SEL	GND	GND	GND	GND

Items	Specifications	Conditions
Directivity	Omnidirectional	
Sensitivity	-26	dB
Frequency Range	100 ~ 7,000	Hz
Rated Voltage	2.1	V
Voltage Range	1.64 ~ 3.6	V
Max. Rated Current	800	µA
Storage Temperature	-40 ~ +125	°C
Operating Temperature	-40 ~ +100	°C
Signal to Noise Ratio	58	dBA
Max. Rated Current (SLEEP mode)	50	µA
Mount Type	Surface Mount	
Connection Method	Surface Mount Pads	

REVISION HISTORY

REV	DESCRIPTION	DATE	APPROVED
	Released from Engineering	4/25/2016	J.S.
1	Updated max rated current, SLEEP current, dimension callout, PIN table	12/21/2017	C.E.

NOTES

1) All dimensions are in mm unless otherwise noted
2) All tolerances are ± 0.15 mm unless otherwise noted
3) All parts meet RoHS
4) Subject to change or redrawn without notice

Additional considerations can be found at www.dbunlimitedco.com/technical-articles.