SUB ASSEMBLY PART NO. AND CH. CODE	NO.	PART NO. AND CH. CODE	MATERIAL	COLOR	QTY.	△2 MATING PART NO.
7282-8853-30, C △3	①	7182-8853-30	PBT	BLACK	1	7283-8853-30
	②	△3 7158-5265	PBT	△3 NATURAL	1	7283-8857-30
△2 7282-8853-80, C △3	①	7182-8853-80	PBT	BROWN	1	△3 7283-8857-80
	②	△3 7158-5265	PBT	△3 NATURAL	1	

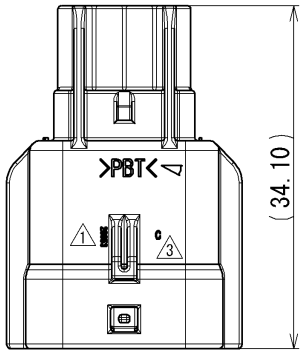

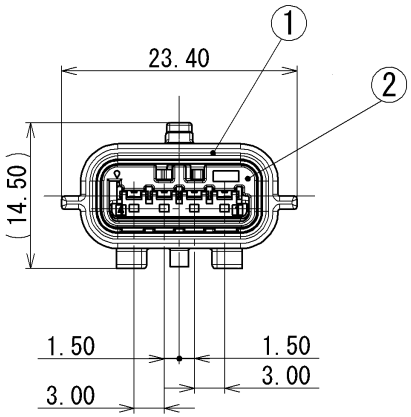

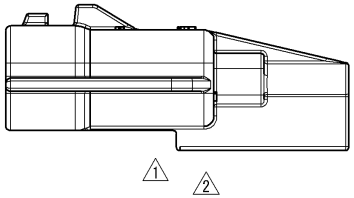

NOTES

△2 1. MATING PART NO. : SEE TABLE

2. APPLICABLE TERMINAL NO. : 7114-4415-02 ETC.

△4 3. APPLICABLE SEAL RUBBER NO. : 7158-3165-90, 7158-3166-60, 7158-3167-80, 7158-3168-80, 7158-3182-20

4. APPLICABLE UNUSED CAVITY PLUG: 7158-3169-40

注記

△2 1. かん合相手品番 : TABLE 参照

2. 適用端子品番 : 7114-4415-02 ETC.

△4 3. 適用ｺﾞﾑ栓品番 : 7158-3165-90, 7158-3166-60, 7158-3167-80 7158-3168-80, 7158-3182-20

4. 適用防水栓品番 : 7158-3169-40

LET	DATE	REVISION RECORD	NO.	CHKD
△5	10/11/15	CHANGED PART NAME	C10-ZA94	R.E
△4	08/08/26	CHANGED NOTE	C08-Z539	M.A
△3	03/08/07	CHANGED CODE, C	C03-X324	T.Y
△2	02/08/21	CHANGED FORM, ETC., B	C02-X881	T.Y
△1	02/02/06	ELIMINATE SECTION, ETC.	C02-X199	T.Y
	2001/11/08	NEW	C01-Y135	T.Y

ISSUE MARK

GENERAL TOLERANCE

	10MAX	50MAX	100MAX	250MAX	2500VR	ANGLE	ECCENT
A	±0.15	±0.2	±0.3	±0.5	±0.75	±30'	0.1
B	±0.2	±0.3	±0.55	±0.95	±1.4	±30'	0.1
C	±0.3	±0.5	±0.8	±1.4	±2	±30'	0.15

SPECIFIED

MASS g

CUSTOMER					
CUSTOMER PART NO.		CUSTOMER DWG NO.			
OFFICE		TRIAL PART NO.			
VENDOR					
VENDOR NO.					
DWG TYPE	DWG SOURCE	DWG DATE	UNIT	SCL	ANGLE
R	NEW	01/11/08	mm	2/1	3
APPROVED	CHECKED	CHECKED	DESIGN	DRAWN	
S. MIZUSE	———	R. CABANGAL	M. KASHIYAMA	R. ESPITAL	
10/11/15	———	10/11/15	01/05/08	10/11/15	

MATL. SPEC. SEE TABLE

TREAT. & FIN.

NAME △5 RH TYPE HOUSING 4P SUB ASSEMBLY MALE

PART NO. CH. CODE 7282-8853-30 ETC. △2

DWG NO. 7282-8853-30:R

SET DRW NO.

YAZAKI CORPORATION