THIS DRAWING IS UNPUBLISHED. RELEASED FOR PUBLICATION 2006
© COPYRIGHT 2006 BY - ALL RIGHTS RESERVED.

LOC	DIST
A1	-

REVISIONS

P	LTR	DESCRIPTION	DATE	DWN	APVD
	D1	ECR-13-001326	23JAN2013	SH	GM
	D2	ECR-16-001066	25JAN2016	SH	PT
	D3	ECR-19-014851	23SEP2019	KC	PT
	D4	ECR-19-014934	24SEP2019	KC	PT

D4

ASSY PN: X-2363287-X
PRODUCTION ONLY IN INDIA

2:1

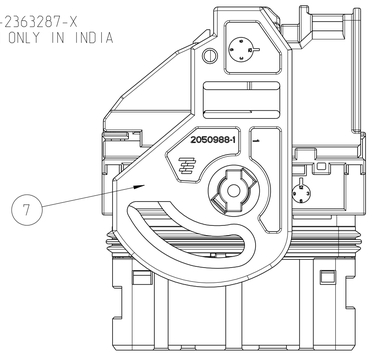

M 1:1

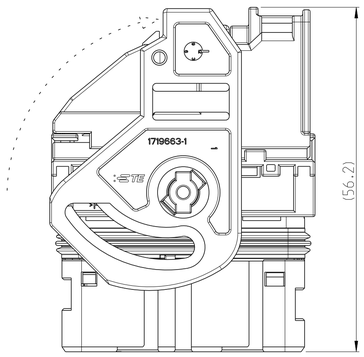

Ansicht mit Kappe.
Hebel in Endraststellung.
Die Kappe ist ein separates Verkaufsteil.

VIEW WITH COVER, LEVER IN END LOCK POSITION. THE COVER IS A SEPARATE SALES PART.

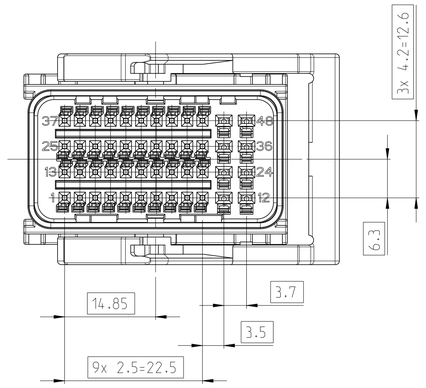

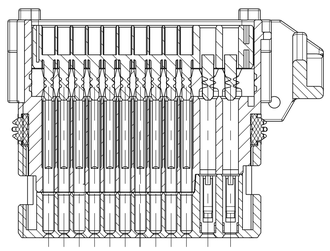

A-A

1. PARTS MUST CONFORM TO USCAR 2, REV. 4
Teile entsprechen USCAR 2, Rev. 4

2. CONNECTOR MATING / UNMATING FORCES MAX. 75N
Steckkraft / Oeffnungskraft max. 75N

3. SEALING FUNCTION REQUIRES ONLY FOLLOWING WIRE SIZE DIAMETERS FOR THE TERMINALS:
Zur Sicherstellung der Dichtigkeit duerfen folgende Drahtquerschnitte bei den Kontakten verwendet werden:

SIGNAL TERMINAL: 0.35mm² - 0.75mm² WITH CABLE OD ∅1.2 - 1.9mm
POWER TERMINAL: 0.5mm² - 1.5mm² WITH CABLE OD ∅1.4 - 2.4mm

4. MATED WITH:
Passend zu:

COVER 0-1719671-1, 0-2112228-1
2-NDRY LOCK 0-1719661-1
2-NDRY LOCK 0-1719668-1

Kappe 0-1719671-1, 0-2112228-1
2te Kontaktsicherung 0-1719661-1
2te Kontaktsicherung 0-1719668-1

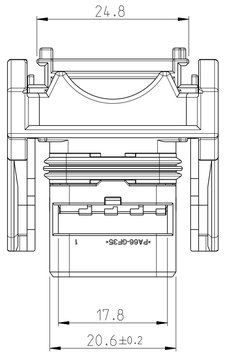

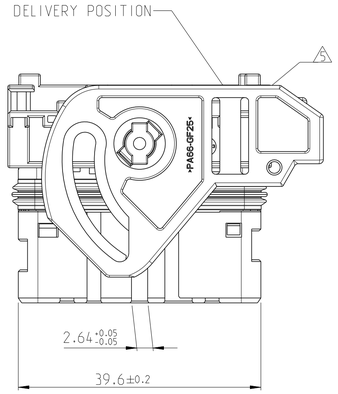

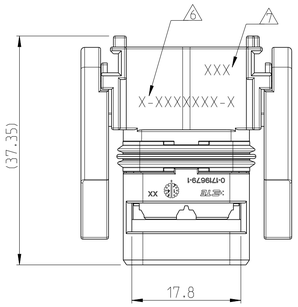

5. LEVER IN PRE-LOCK POSITION
Hebel in Vorraststellung

6. MARKING WITH TE PN. SEE PINOUTCONFIGURATION ON DRAWING 1670068
Markierung fuer TE PN. siehe Pinoutkonfigurationtabelle auf Zeichnung 1670068

7. A THREE DIGIT MARKING ACCORDING TABLE ON DRAWING 1670068 LOCATED ON SIDE OF THE FEMALE HOUSING
Eine dreistellige Markierung gemaess Tabelle wie auf Zeichnung 1670068 auf der Seite des Kontaktgehaeuses

8 INTERFACE SPECIFICATION: 114-18762
Schnittstellen Spezifikation: 114-18762

PIN-OUT CONFIGURATION SEE DRAWING 1670068

PARTS SHOWN AS EXPLODED VIEW

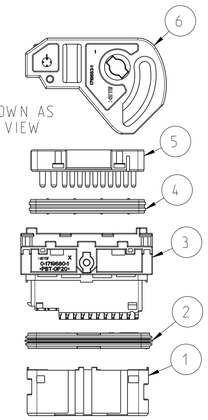

1:1

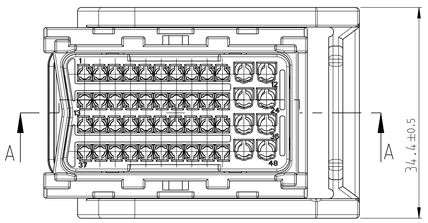

TERMINALS				
968220-1	PRE-TIN	0.35 - 0.5	Ø1.20 - 1.60	BLINDPLUG: PN 1394871-1 Blindstopfen: PN 1394871-1
968221-1	PRE-TIN	0.5 - 0.75	Ø1.40 - 1.90	
638652-2	PRE-TIN	0.5 - 1.00	Ø1.40 - 2.10	BLINDPLUG: PN 1670108-1 Blindstopfen: PN 1670108-1
638652-1	PRE-TIN	1.0 - 1.5	Ø1.90 - 2.40	
TERMINALS TE PN TE Kontakt PN	FINISH Oberflaeche	WIRE SIZE (mm²) Drahtquerschnitt (mm²)	WIRE SIZE DIAMETER Kabeldurchmesser	NOTES Bemerkungen

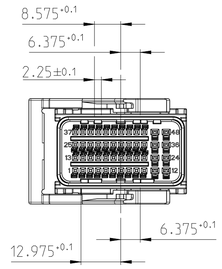

CODING 1
BLACK
LEVER LEFT
CABLE EXIT RIGHT
PN 1719678 / 2177513 / 2288260

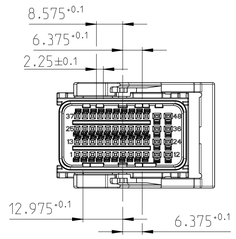

CODING 1
BLACK
LEVER RIGHT
CABLE EXIT LEFT
PN 1670068 / 2177656 / 2288259

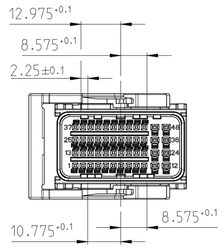

CODING 2
GREY
LEVER LEFT
CABLE EXIT RIGHT
PN 1719683 / 2177527 / 2288258

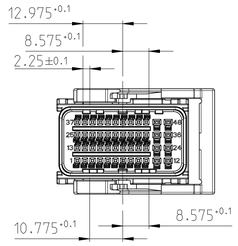

CODING 2
GREY
LEVER RIGHT
CABLE EXIT LEFT
PN 1670069 / 2177514 / 2288257

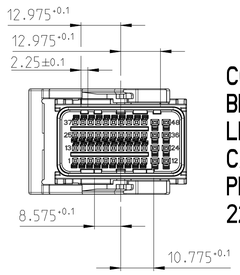

CODING 3
BROWN
LEVER LEFT
CABLE EXIT RIGHT
PN 1418416 / 2177531 / 2288256 / 2363287

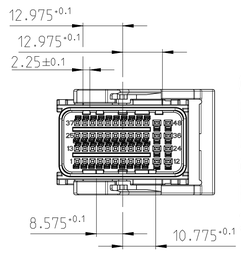

CODING 3
BROWN
LEVER RIGHT
CABLE EXIT LEFT
PN 1670067 / 2177543 / 2288254

X-2363287-X	X-1418416-X X-2177531-X X-2288256-X	X-1670067-X X-2177543-X X-2288254-X	X-1719683-X X-2177527-X X-2288258-X	X-1670069-X X-2177514-X X-2288257-X	X-1719678-X X-2177513-X X-2288260-X	X-1670068-X X-2177656-X X-2288259-X	PART NUMBER OF EACH ASSY			
CODING 3 LEFT	CODING 3 LEFT	CODING 3 RIGHT	CODING 2 LEFT	CODING 2 RIGHT	CODING 1 LEFT	CODING 1 RIGHT	CODING LEVER POSITION			
D	D	D	D	D	D	D	REVISION OF EACH ASSY NO			
QTY REQD PER ASSY							PARTS LIST			
1							PA66-GF30	LEVER LEFT SIDE	BLACK schwarz	7
	1		1		1		PA66-GF25	LEVER LEFT SIDE	NATURAL natur	6
		1		1		1	PA66-GF25	LEVER RIGHT SIDE	NATURAL natur	6
1	1	1	1	1	1	1	PBT-GF20	COVER FOR FAMILY SEAL	BLACK schwarz	5
1	1	1	1	1	1	1	MVQ	FAMILY SEAL -	LIGHT BLUE hellblau	4
1	1	1	1	1	1	1	PBT-GF20	48 pos. (UPPER PART) -	BLACK schwarz	3
1	1	1	1	1	1	1	MVQ	RADIAL SEAL -	NATURAL natur	2
1	1	1					PA66-GF35	48 pos. (LOWER PART) CODING 3	BROWN braun	1
			1	1			PA66-GF35	48 pos. (LOWER PART) CODING 2	GREY grau	1
					1	1	PA66-GF35	48 pos. (LOWER PART) CODING 1	BLACK schwarz	1
							MATERIAL	DESCRIPTION	COLOUR	ITEM NO

1670068 AS SHOWN
1670068 wie gezeichnet

THIS DRAWING IS A CONTROLLED DOCUMENT.

DIMENSIONS: mm

TOLERANCES UNLESS OTHERWISE SPECIFIED:
0 PLC ±0.3
1 PLC ±0.3
2 PLC ±0.3
3 PLC ±0.3
4 PLC ±0.3
ANGLES ±5.5°

MATERIAL - -
FINISH - -

DWN M. Kressmann 10MAY2006
CHK K. Roth 24MAY2006
APVD G. Mumper 23JUL2007
PRODUCT SPEC -
APPLICATION SPEC 114-18761-1
WEIGHT -

TE Connectivity

NAME 48POS. MIXED RECEPTACLE HOUSING 40xMQS AND 8x1.5
-

SIZE	CAGE CODE	DRAWING NO	RESTRICTED TO
A1	00779	C-1719678	

CUSTOMER DRAWING | SCALE 2:1 | SHEET 1 OF 1 | REV D4

4805 (3/11)