# MOLDING POWER INDUCTORS

## 1. Features

- High rated current
- Frequency up to 3 MHz
- 125℃ maximum total temperature operation
- Low core loss
- Ultra low buzz noise due to molding construction
- Halogen Free & ROHS compliant

## 2. Applications

- Laptops and PCs
- Switch and servers
- Base stations
- DC/DC converters
- Battery powered devices
- SSD modules

## 3. Product Identification

| XR | XXXX | --- XXX | M |
|---|---|---|---|
| ① | ② | ③ | ④ |

① Series name
② Dimensions and shape（0412~1265）
③ Inductance Value
④ Inductance Tolerance ( M= ± 20% )

## 4. Dimensions (unit:mm)

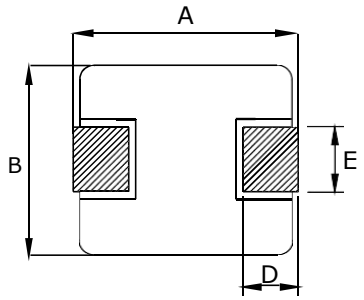


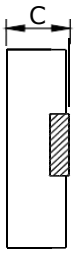


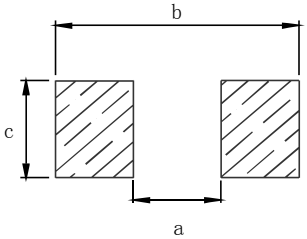


Recommend Land Pattern

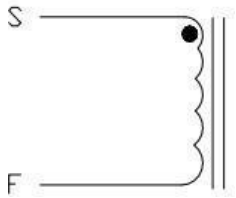


SCHEMATIC DRAWING

| series | A | B | C | D | E | a typ | b typ | c typ |
|---|---|---|---|---|---|---|---|---|
| XR1250 | 13.45±0.35 | 12.6±0.3 | 4.8±0.2 | 2.0±0.5 | 4.0±0.5 | 8.0 | 14.5 | 4.5 |

## 5. Marking

The inductor is marked with a 3-digit code

| Nominal Inductance | |
|---|---|
| Example | Nominal Value |
| 1R0 | 1.0 μH |
| 100 | 10 μH |
| 101 | 100 μH |

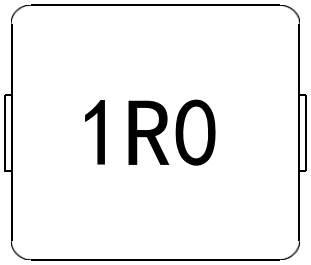


Note：Using Ink for marking

## 6. Structure and Components

| Symbol | Components | Material |
|---|---|---|
| a | MARKING | Ink(black) |
| b | CORE | Alloy Sponge Powder |
| c | WIRE | Polyurethane copper wire |
| d | Terminal | Copper plated with Sn |

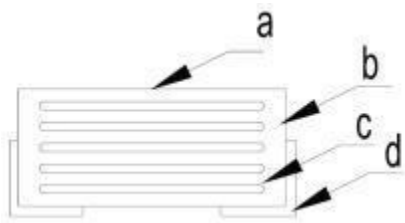

## 7. Electrical characteristics

**•XR1250 TYPE**

| Part No. | Inductance | DC Resistance | Saturation Current | Heating Rating Current |
|---|---|---|---|---|
| | L0 (μH) | DCR (m ) | Isat (A) | Irms (A) |
| | ±20 %, 100 kHz, 1V | MAX. | TYP. | TYP. |
| XR1250-R22M | 0.22 | 0.7 | 75 | 50 |
| XR1250-R36M | 0.36 | 0.85 | 50 | 42 |
| XR1250-R50M | 0.50 | 1.15 | 48 | 38 |
| XR1250-R68M | 0.68 | 1.55 | 46 | 33 |
| XR1250-R82M | 0.82 | 1.67 | 39 | 30 |
| XR1250-1R0M | 1.0 | 2.2 | 35 | 26 |
| XR1250-1R5M | 1.5 | 3.2 | 33 | 23 |
| XR1250-2R2M | 2.2 | 5.0 | 24 | 15 |
| XR1250-3R3M | 3.3 | 7 | 22 | 14 |
| XR1250-4R7M | 4.7 | 9 | 20 | 13 |
| XR1250-6R8M | 6.8 | 18 | 16 | 12 |
| XR1250-100M | 10 | 22 | 12 | 9 |
| XR1250-150M | 15 | 30 | 10 | 8 |
| XR1250-220M | 22 | 58 | 6.5 | 4.5 |
| XR1250-330M | 33 | 84 | 6.0 | 3.5 |
| XR1250-470M | 47 | 130 | 5.0 | 3.0 |

**• Notes**

1. All test data is referenced to 25 °C ambient
2. Operating temperature range - 55 °C to + 125 °C
3. Irms (A):DC current (A) that will cause an approximate ΔT of 40 °C(reference ambient temperature is 25°C)
4. Isat(A):DC current (A) that will cause L0 to drop approximately 30 %
5. The part temperature (ambient + temp rise) should not exceed 125 °C under worst case operating conditions. Circuit design, component placement, PWB trace size and thickness, airflow and other cooling provisions all affect the part temperature. Part temperature should be verified in the end application.
6. Absolute maximum voltage 30VDC

**8. Reliability Test**

<table>
<tr><th>Item</th><th>Specification and Requirement</th><th>Test Method</th></tr>
<tr><td>Solderability</td><td>1. No case deformation<br>or change in apperarance<br><br>2. New solder coverage<br>More than 90%</td><td>1.Preheat：155℃±5℃ ，60S±2S<br>2.Tin: lead-free.<br>3.Temperature:245℃±5℃，flux 3.0S±0.5S.</td></tr>
<tr><td>Mechanical shock</td><td>1. No case deformation<br>or change in apperarance<br><br>2. △L/Lo≦±10%</td><td>1. Acceleration： 100G<br>2. Pulse time:：6ms<br>3. 3 times in each positive and negative direction of 3 mutual perpendicular directions</td></tr>
<tr><td>Mechanical vibration</td><td>1. No case deformation<br>or change in apperarance<br><br>2. △L/Lo≦±10%</td><td>1. The test samples shall be soldered to the board. Then it shall be submitted to below test conditions.
<table>
<tr><td>Fre. Range</td><td>10~55Hz</td></tr>
<tr><td>Total Amplitude</td><td>1.5mm</td></tr>
<tr><td>Sweeping Method</td><td>10Hz to 55Hz to 10Hz</td></tr>
<tr><td>Time</td><td>For 2 hours on each X,Y,Z axis.</td></tr>
</table>
2. Recovery: At least 2 hours of recovery underthe standard condition after the test, followed by the measurement within 24 ±2 hours.</td></tr>
<tr><td>Thermal Shock</td><td>Inductance change:<br>Within ± 10% Without distinct damage in appearance</td><td>1. First -55℃ for 30 minutes，last 125℃ for 30 minutes as 1 cycle. Go through 1000 cycles.<br>2. Max transfer time is 2 minutes.<br>3. Measured at room temperature after placing for 24±2 hours</td></tr>
<tr><td>Humidity Resistance</td><td>Inductance change:<br>Within ± 10% Without distinct damage in appearance</td><td>1.Reflow 2 times,<br>2.85℃,85%RH,1000 hours<br>3.Measured at room temperature after placing for 24±2 hours</td></tr>
<tr><td>Low temperature storage</td><td>Inductance change:<br>Within ± 10% Without distinct damage in appearance</td><td>1. Temperature：-55 ± 2℃<br>2. Time：1000 hours<br>3. Measured at room temperature after placing for 24±2 hours</td></tr>
</table>

| | | |
|---|---|---|
| High temperature storage | Inductance change:<br>Within ± 10% Without distinct damage in appearance | 1. Temperature：+125 ± 2℃<br>2. Time：1000 hours<br>3. Measured at room temperature after placing for 24±2 hours |
| Board Flex | Inductance change:<br>Within ± 10% Without distinct damage in appearance | 1、Run through IR reflow for 2 times；<br>2、Place the 100mm X 40mm board into a fixture similar to the one shown in below Figure with the component facing down<br>3 、The apparatus shall consist of mechanical means to apply a force which will bend the board (D) x = 2 mm minimum.<br>4、The duration of the applied forces shall be 60±5 sec. The force is to be applied only once to the board.<br> 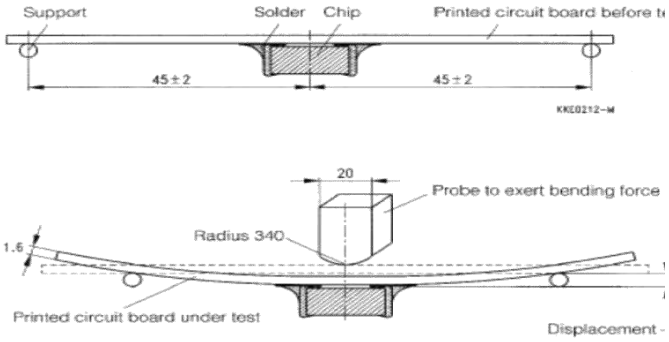 |
| Terminal Strength | No removal or split of the termination or other defects shall occur. | 1、The test samples shall be soldered to the board<br>2、Push the product vertically from the side of the sample using the thrust tester.<br>3、Automotive electronics：17.7N，60S±1s，X，Ydirect.<br> 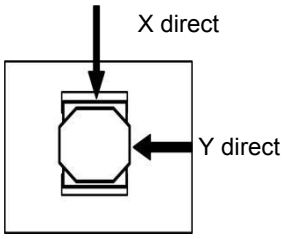 |

## Recommended Soldering Technologies

### (1) Re-flowing Profile

Preheat condition: 150 ~200℃/60~180sec.

Allowed time above 217℃: 80~120sec.

Max temp: 260℃

Max time at max temp: 10 sec.

Solder paste: Sn/3.0Ag/0.5Cu

Allowed Reflow time: 2x max

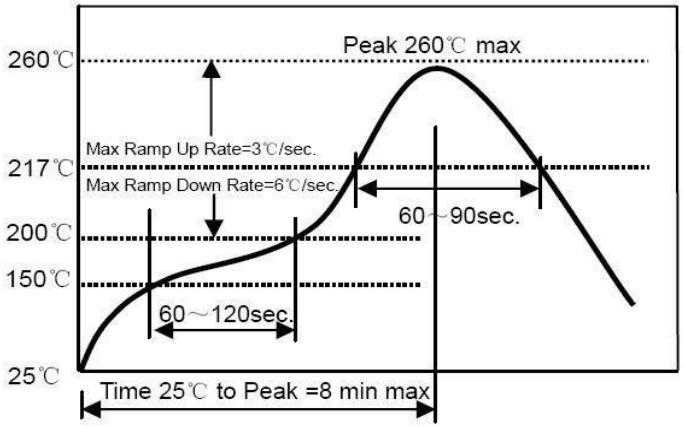


### (2) Iron Soldering Profile

Iron soldering power: Max. 30W

Pre-heating: 150℃/60sec.

Soldering time: 3sec. Max.

Solder paste: Sn/3.0Ag/0.5Cu

Max.1 times for iron soldering

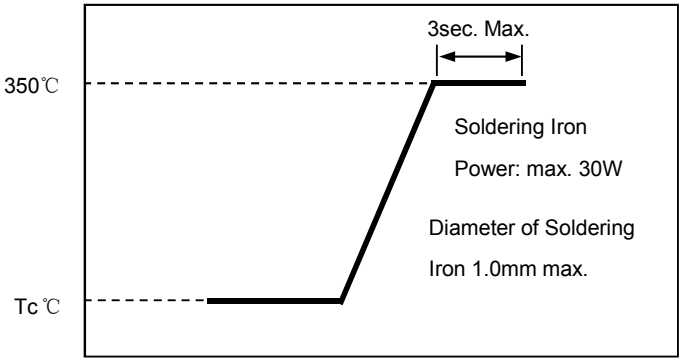

## 9. Packaging, Storage and Transportation

- Tape Carrier Packaging:

| Type | Standard Quantity (pcs/reel) | Type | Standard Quantity (pcs/reel) |
|---|---|---|---|
| XR0412 | **2000/3000** | XR0640 | **1000** |
| XR0420 | **3000** | XR0650 | **1000** |
| XR0518 | **2000/2500** | XR1040 | **500/1000** |
| XR0520 | **2000/2500** | XR1045 | **800** |
| XR0530 | **1500/2000** | XR1240 | **500** |
| XR0620 | **1000/1500** | XR1250 | **500** |
| XR0624 | **1000/1500** | XR1265 | **400/500** |
| XR0630 | **1000** | | |

- Taping Drawings (UNIT:mm)

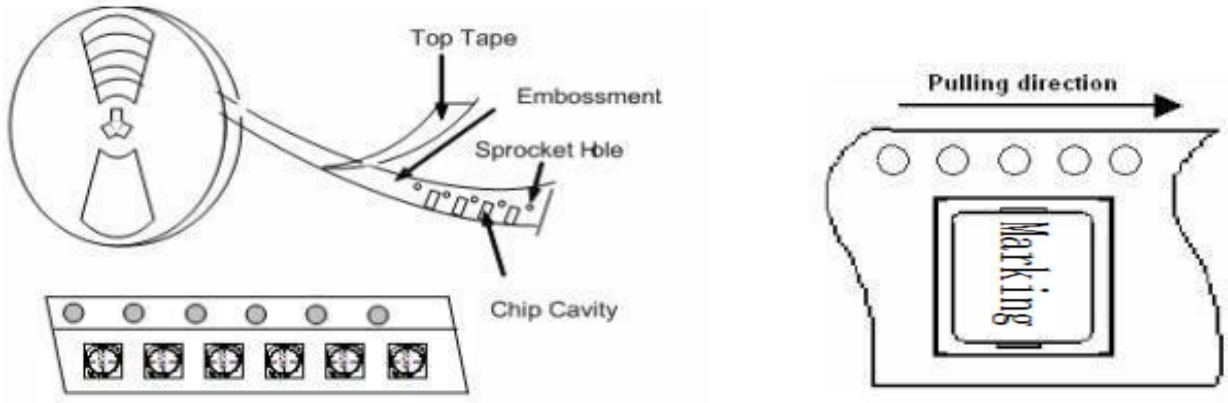


- Reel and Taping Dimensions (UNIT:mm)

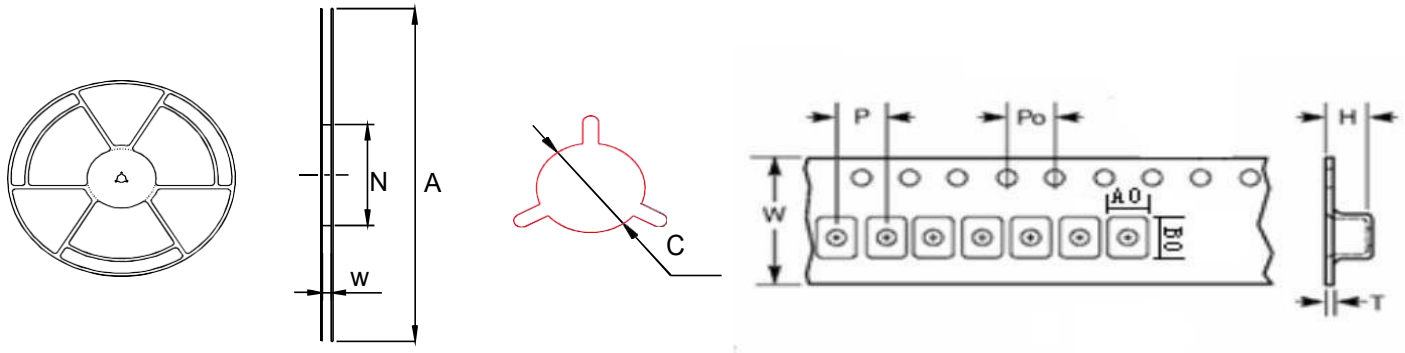

| Type | Reel Dimensions（mm） | | | | Tape Dimensions（mm） | | | | | | |
|---|---|---|---|---|---|---|---|---|---|---|---|
| | A | N | W | C | W | P | P0 | A0 | B0 | H | T |
| XR0412 | 330 +2/-0 | 100 +2/-0 | 12.4 +2/-0 | 13.2 ±0.2 | 12±0.3 | 8±0.1 | 4±0.1 | 4.4±0.1 | 4.9±0.1 | 1.5±0.05 | 0.3±0.05 |
| XR0420 | 330 +2/-0 | 100 +2/-0 | 12.4 +2/-0 | 13.2 ±0.2 | 12±0.3 | 8±0.1 | 4±0.1 | 4.4±0.1 | 4.9±0.1 | 2.3±0.05 | 0.35±0.05 |
| XR0518 | 330 +2/-0 | 100 +2/-0 | 12.4 +2/-0 | 13.2 ±0.2 | 12±0.3 | 8±0.1 | 4±0.1 | 5.4±0.1 | 5.9±0.1 | 2.1±0.05 | 0.35±0.05 |
| XR0520 | 330 +2/-0 | 100 +2/-0 | 12.4 +2/-0 | 13.2 ±0.2 | 12±0.3 | 8±0.1 | 4±0.1 | 5.5±0.1 | 5.85±0.1 | 2.2±0.1 | 0.35±0.05 |
| XR0530 | 330 +2/-0 | 100 +2/-0 | 12.4 +2/-0 | 13.2 ±0.2 | 12±0.3 | 8±0.1 | 4±0.1 | 5.4±0.1 | 5.9±0.1 | 3.3±0.05 | 0.35±0.05 |
| XR0620 | 330 +2/-0 | 100 +2/-0 | 16.4 +2/-0 | 13.2 ±0.2 | 16±0.3 | 12±0.1 | 4±0.1 | 6.9±0.1 | 7.5±0.1 | 2.1±0.05 | 0.35±0.05 |
| XR0624 | 330 +2/-0 | 100 +2/-0 | 16.4 +2/-0 | 13.2 ±0.2 | 16±0.3 | 12±0.1 | 4±0.1 | 6.9±0.1 | 7.5±0.1 | 2.7±0.05 | 0.35±0.05 |
| XR0630 | 330 +2/-0 | 100 +2/-0 | 16.4 +2/-0 | 13.2 ±0.2 | 16±0.3 | 12±0.1 | 4±0.1 | 6.9±0.1 | 7.5±0.1 | 3.3±0.05 | 0.35±0.05 |
| XR0640 | 330 +2/-0 | 100 +2/-0 | 16.4 +2/-0 | 13.2 ±0.2 | 16±0.3 | 12±0.1 | 4±0.1 | 6.9±0.1 | 7.5±0.1 | 4.2±0.1 | 0.35±0.05 |
| XR0650 | 330 +2/-0 | 100 +2/-0 | 16.4 +2/-0 | 13.2 ±0.2 | 16±0.3 | 12±0.1 | 4±0.1 | 6.9±0.1 | 7.5±0.1 | 5.2±0.1 | 0.4±0.05 |
| XR1040 | 330 +2/-0 | 100 +2/-0 | 24.4 +2/-0 | 13.2 ±0.2 | 24±0.3 | 16±0.1 | 4±0.1 | 10.4±0.1 | 11.5±0.1 | 4.3±0.1 | 0.35±0.05 |
| XR1045 | 330 +2/-0 | 100 +2/-0 | 24.4 +2/-0 | 13.2 ±0.2 | 24±0.3 | 16±0.1 | 4±0.1 | 10.4±0.1 | 11.5±0.1 | 4.8±0.1 | 0.35±0.05 |
| XR1240 | 330 +2/-0 | 100 +2/-0 | 24.4 +2/-0 | 13.2 ±0.2 | 24±0.3 | 16±0.1 | 4±0.1 | 13.4±0.1 | 14.4±0.1 | 4.3±0.1 | 0.5±0.05 |
| XR1250 | 330 +2/-0 | 100 +2/-0 | 24.4 +2/-0 | 13.2 ±0.2 | 24±0.3 | 16±0.1 | 4±0.1 | 13.2±0.1 | 14.4±0.1 | 5.3±0.1 | 0.5±0.05 |
| XR1265 | 330 +2/-0 | 100 +2/-0 | 24.4 +2/-0 | 13.2 ±0.2 | 24±0.3 | 16±0.1 | 4±0.1 | 13.2±0.1 | 14.4±0.1 | 6.3±0.1 | 0.5±0.05 |

• Peel force of top cover tape

The peel speed shall be about 300mm/minute

The peel force of top cover tape shall be between 0.1 to 1.3 N

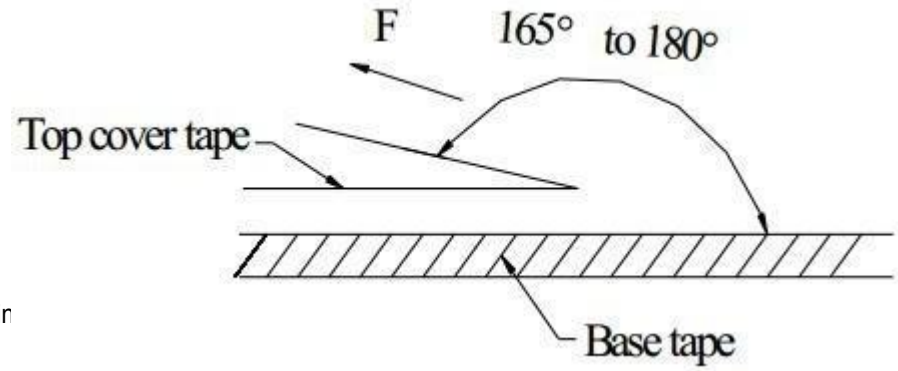


• Label makir

Label on the reel

- Customer's part Number
- Lot Number
- Quantity
- date code

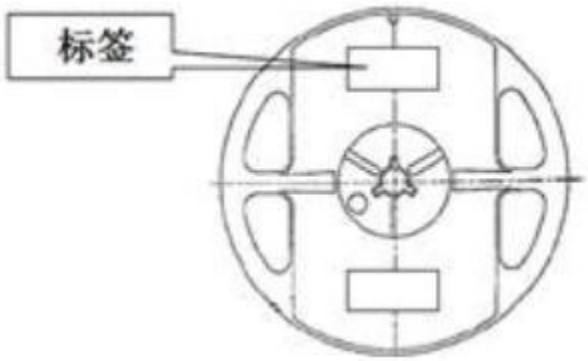


Shipping Label

- Customer's part Number
- Manufacturer's part Number
- Quantity
- date code