MOLDING POWER INDUCTORS

1. Features

- High rated current
- Frequency up to 3 MHz
- 125℃ maximum total temperature operation
- Low core loss
- Ultra low buzz noise due to molding construction
- Halogen Free & ROHS compliant

2. Applications

- Laptops and PCs
- Switch and servers
- Base stations
- DC/DC converters
- Battery powered devices
- SSD modules

3. Product Identification

XR	XXXX	--- XXX	M
①	②	③	④

① Series name
② Dimensions and shape（0412~1265）
③ Inductance Value
④ Inductance Tolerance (M= ± 20%)

4. Dimensions (unit:mm)

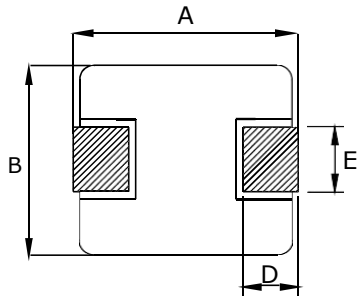

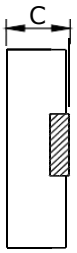

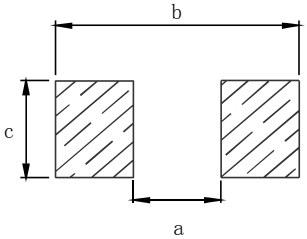

Recommend Land Pattern

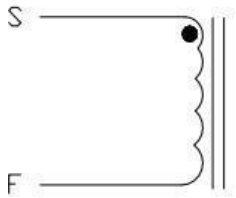

SCHEMATIC DRAWING

series	A	B	C	D	E	a typ	b typ	c typ
XR1250	13.45±0.35	12.6±0.3	4.8±0.2	2.0±0.5	4.0±0.5	8.0	14.5	4.5

5. Marking

The inductor is marked with a 3-digit code

Nominal Inductance	
Example	Nominal Value
1R0	1.0 μH
100	10 μH
101	100 μH

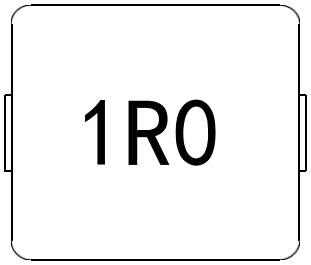

Note：Using Ink for marking

6. Structure and Components

Symbol	Components	Material
a	MARKING	Ink(black)
b	CORE	Alloy Sponge Powder
c	WIRE	Polyurethane copper wire
d	Terminal	Copper plated with Sn

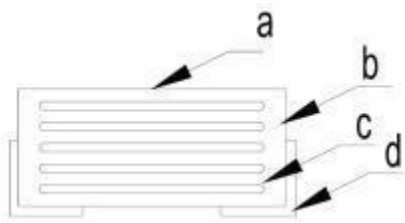

7. Electrical characteristics

•XR1250 TYPE

Part No.	Inductance	DC Resistance	Saturation Current	Heating Rating Current
	L0 (μH)	DCR (m)	Isat (A)	Irms (A)
	±20 %, 100 kHz, 1V	MAX.	TYP.	TYP.
XR1250-R22M	0.22	0.7	75	50
XR1250-R36M	0.36	0.85	50	42
XR1250-R50M	0.50	1.15	48	38
XR1250-R68M	0.68	1.55	46	33
XR1250-R82M	0.82	1.67	39	30
XR1250-1R0M	1.0	2.2	35	26
XR1250-1R5M	1.5	3.2	33	23
XR1250-2R2M	2.2	5.0	24	15
XR1250-3R3M	3.3	7	22	14
XR1250-4R7M	4.7	9	20	13
XR1250-6R8M	6.8	18	16	12
XR1250-100M	10	22	12	9
XR1250-150M	15	30	10	8
XR1250-220M	22	58	6.5	4.5
XR1250-330M	33	84	6.0	3.5
XR1250-470M	47	130	5.0	3.0

• Notes

1. All test data is referenced to 25 °C ambient
2. Operating temperature range - 55 °C to + 125 °C
3. Irms (A):DC current (A) that will cause an approximate ΔT of 40 °C(reference ambient temperature is 25°C)
4. Isat(A):DC current (A) that will cause L0 to drop approximately 30 %
5. The part temperature (ambient + temp rise) should not exceed 125 °C under worst case operating conditions. Circuit design, component placement, PWB trace size and thickness, airflow and other cooling provisions all affect the part temperature. Part temperature should be verified in the end application.
6. Absolute maximum voltage 30VDC

8. Reliability Test

<table>
<tr><th>Item</th><th>Specification and Requirement</th><th>Test Method</th></tr>
<tr><td>Solderability</td><td>1. No case deformation
or change in apperarance

2. New solder coverage
More than 90%</td><td>1.Preheat：155℃±5℃ ，60S±2S
2.Tin: lead-free.
3.Temperature:245℃±5℃，flux 3.0S±0.5S.</td></tr>
<tr><td>Mechanical shock</td><td>1. No case deformation
or change in apperarance

2. △L/Lo≦±10%</td><td>1. Acceleration： 100G
2. Pulse time:：6ms
3. 3 times in each positive and negative direction of 3 mutual perpendicular directions</td></tr>
<tr><td>Mechanical vibration</td><td>1. No case deformation
or change in apperarance

2. △L/Lo≦±10%</td><td>1. The test samples shall be soldered to the board. Then it shall be submitted to below test conditions.
<table>
<tr><td>Fre. Range</td><td>10~55Hz</td></tr>
<tr><td>Total Amplitude</td><td>1.5mm</td></tr>
<tr><td>Sweeping Method</td><td>10Hz to 55Hz to 10Hz</td></tr>
<tr><td>Time</td><td>For 2 hours on each X,Y,Z axis.</td></tr>
</table>
2. Recovery: At least 2 hours of recovery underthe standard condition after the test, followed by the measurement within 24 ±2 hours.</td></tr>
<tr><td>Thermal Shock</td><td>Inductance change:
Within ± 10% Without distinct damage in appearance</td><td>1. First -55℃ for 30 minutes，last 125℃ for 30 minutes as 1 cycle. Go through 1000 cycles.
2. Max transfer time is 2 minutes.
3. Measured at room temperature after placing for 24±2 hours</td></tr>
<tr><td>Humidity Resistance</td><td>Inductance change:
Within ± 10% Without distinct damage in appearance</td><td>1.Reflow 2 times,
2.85℃,85%RH,1000 hours
3.Measured at room temperature after placing for 24±2 hours</td></tr>
<tr><td>Low temperature storage</td><td>Inductance change:
Within ± 10% Without distinct damage in appearance</td><td>1. Temperature：-55 ± 2℃
2. Time：1000 hours
3. Measured at room temperature after placing for 24±2 hours</td></tr>
</table>

High temperature storage	Inductance change: Within ± 10% Without distinct damage in appearance	1. Temperature：+125 ± 2℃ 2. Time：1000 hours 3. Measured at room temperature after placing for 24±2 hours
Board Flex	Inductance change: Within ± 10% Without distinct damage in appearance	1、Run through IR reflow for 2 times； 2、Place the 100mm X 40mm board into a fixture similar to the one shown in below Figure with the component facing down 3 、The apparatus shall consist of mechanical means to apply a force which will bend the board (D) x = 2 mm minimum. 4、The duration of the applied forces shall be 60±5 sec. The force is to be applied only once to the board. 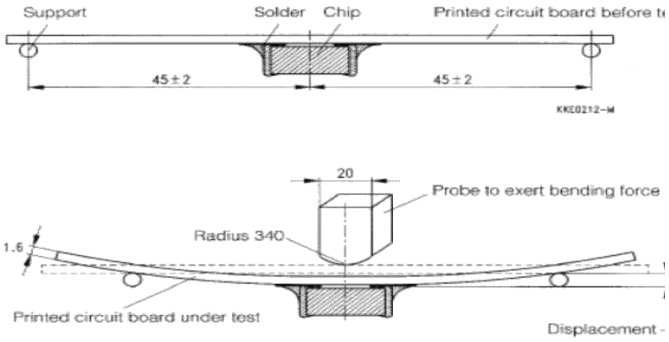
Terminal Strength	No removal or split of the termination or other defects shall occur.	1、The test samples shall be soldered to the board 2、Push the product vertically from the side of the sample using the thrust tester. 3、Automotive electronics：17.7N，60S±1s，X，Ydirect. 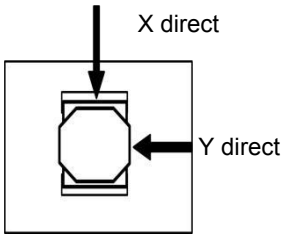

Recommended Soldering Technologies

(1) Re-flowing Profile

Preheat condition: 150 ~200℃/60~180sec.

Allowed time above 217℃: 80~120sec.

Max temp: 260℃

Max time at max temp: 10 sec.

Solder paste: Sn/3.0Ag/0.5Cu

Allowed Reflow time: 2x max

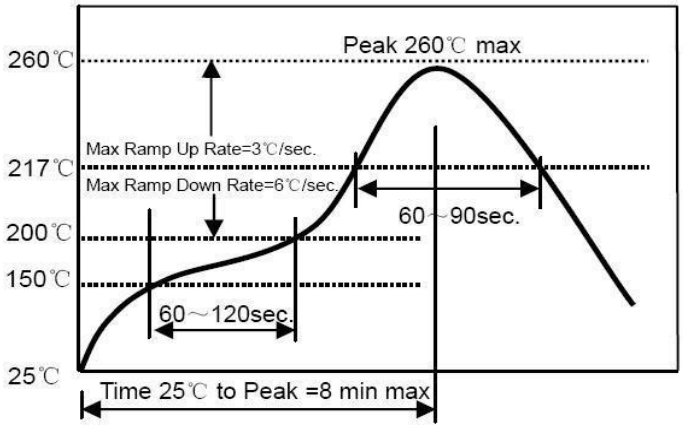

(2) Iron Soldering Profile

Iron soldering power: Max. 30W

Pre-heating: 150℃/60sec.

Soldering time: 3sec. Max.

Solder paste: Sn/3.0Ag/0.5Cu

Max.1 times for iron soldering

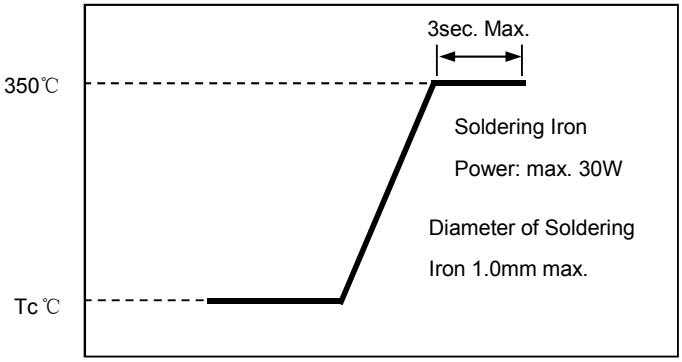

9. Packaging, Storage and Transportation

- Tape Carrier Packaging:

Type	Standard Quantity (pcs/reel)	Type	Standard Quantity (pcs/reel)
XR0412	**2000/3000**	XR0640	**1000**
XR0420	**3000**	XR0650	**1000**
XR0518	**2000/2500**	XR1040	**500/1000**
XR0520	**2000/2500**	XR1045	**800**
XR0530	**1500/2000**	XR1240	**500**
XR0620	**1000/1500**	XR1250	**500**
XR0624	**1000/1500**	XR1265	**400/500**
XR0630	**1000**		

- Taping Drawings (UNIT:mm)

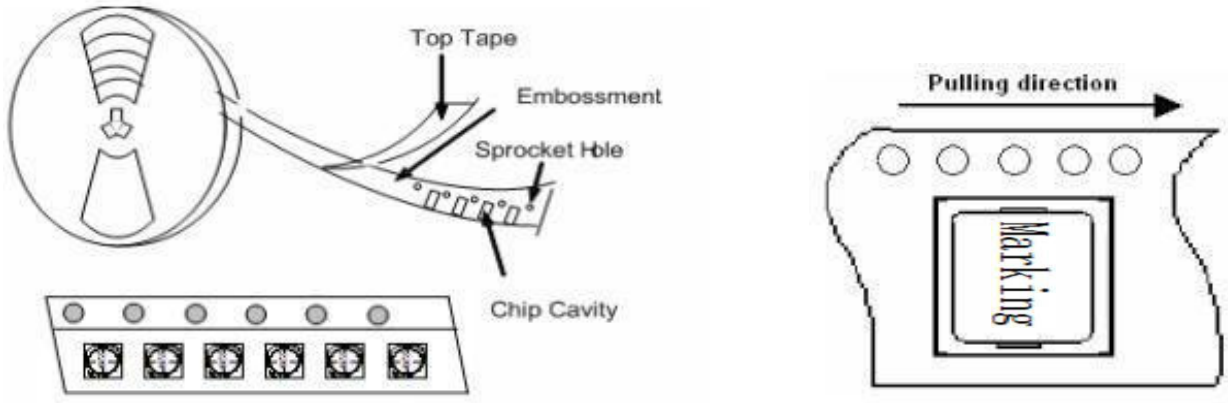

- Reel and Taping Dimensions (UNIT:mm)

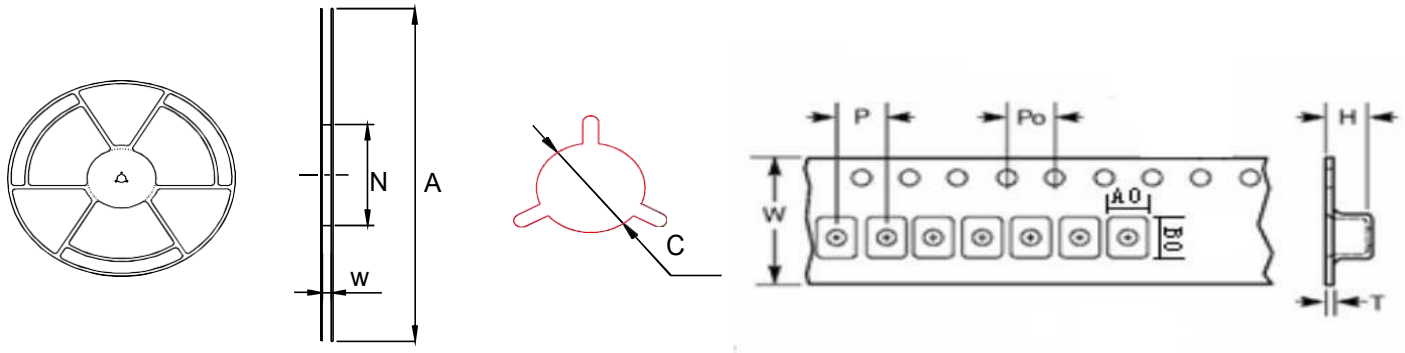

Type	Reel Dimensions（mm）				Tape Dimensions（mm）						
	A	N	W	C	W	P	P0	A0	B0	H	T
XR0412	330 +2/-0	100 +2/-0	12.4 +2/-0	13.2 ±0.2	12±0.3	8±0.1	4±0.1	4.4±0.1	4.9±0.1	1.5±0.05	0.3±0.05
XR0420	330 +2/-0	100 +2/-0	12.4 +2/-0	13.2 ±0.2	12±0.3	8±0.1	4±0.1	4.4±0.1	4.9±0.1	2.3±0.05	0.35±0.05
XR0518	330 +2/-0	100 +2/-0	12.4 +2/-0	13.2 ±0.2	12±0.3	8±0.1	4±0.1	5.4±0.1	5.9±0.1	2.1±0.05	0.35±0.05
XR0520	330 +2/-0	100 +2/-0	12.4 +2/-0	13.2 ±0.2	12±0.3	8±0.1	4±0.1	5.5±0.1	5.85±0.1	2.2±0.1	0.35±0.05
XR0530	330 +2/-0	100 +2/-0	12.4 +2/-0	13.2 ±0.2	12±0.3	8±0.1	4±0.1	5.4±0.1	5.9±0.1	3.3±0.05	0.35±0.05
XR0620	330 +2/-0	100 +2/-0	16.4 +2/-0	13.2 ±0.2	16±0.3	12±0.1	4±0.1	6.9±0.1	7.5±0.1	2.1±0.05	0.35±0.05
XR0624	330 +2/-0	100 +2/-0	16.4 +2/-0	13.2 ±0.2	16±0.3	12±0.1	4±0.1	6.9±0.1	7.5±0.1	2.7±0.05	0.35±0.05
XR0630	330 +2/-0	100 +2/-0	16.4 +2/-0	13.2 ±0.2	16±0.3	12±0.1	4±0.1	6.9±0.1	7.5±0.1	3.3±0.05	0.35±0.05
XR0640	330 +2/-0	100 +2/-0	16.4 +2/-0	13.2 ±0.2	16±0.3	12±0.1	4±0.1	6.9±0.1	7.5±0.1	4.2±0.1	0.35±0.05
XR0650	330 +2/-0	100 +2/-0	16.4 +2/-0	13.2 ±0.2	16±0.3	12±0.1	4±0.1	6.9±0.1	7.5±0.1	5.2±0.1	0.4±0.05
XR1040	330 +2/-0	100 +2/-0	24.4 +2/-0	13.2 ±0.2	24±0.3	16±0.1	4±0.1	10.4±0.1	11.5±0.1	4.3±0.1	0.35±0.05
XR1045	330 +2/-0	100 +2/-0	24.4 +2/-0	13.2 ±0.2	24±0.3	16±0.1	4±0.1	10.4±0.1	11.5±0.1	4.8±0.1	0.35±0.05
XR1240	330 +2/-0	100 +2/-0	24.4 +2/-0	13.2 ±0.2	24±0.3	16±0.1	4±0.1	13.4±0.1	14.4±0.1	4.3±0.1	0.5±0.05
XR1250	330 +2/-0	100 +2/-0	24.4 +2/-0	13.2 ±0.2	24±0.3	16±0.1	4±0.1	13.2±0.1	14.4±0.1	5.3±0.1	0.5±0.05
XR1265	330 +2/-0	100 +2/-0	24.4 +2/-0	13.2 ±0.2	24±0.3	16±0.1	4±0.1	13.2±0.1	14.4±0.1	6.3±0.1	0.5±0.05

• Peel force of top cover tape

The peel speed shall be about 300mm/minute

The peel force of top cover tape shall be between 0.1 to 1.3 N

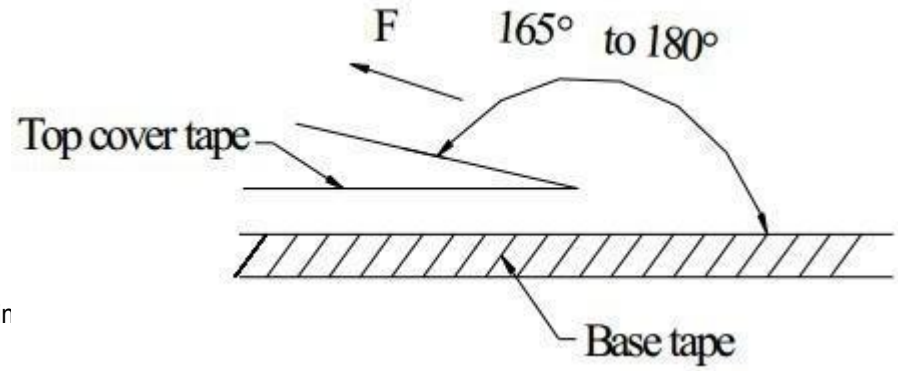

• Label makir

Label on the reel

- Customer's part Number
- Lot Number
- Quantity
- date code

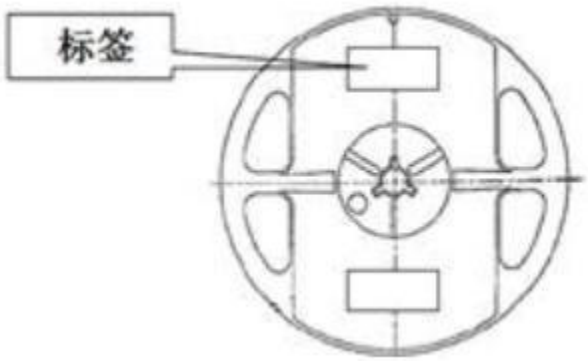

Shipping Label

- Customer's part Number
- Manufacturer's part Number
- Quantity
- date code