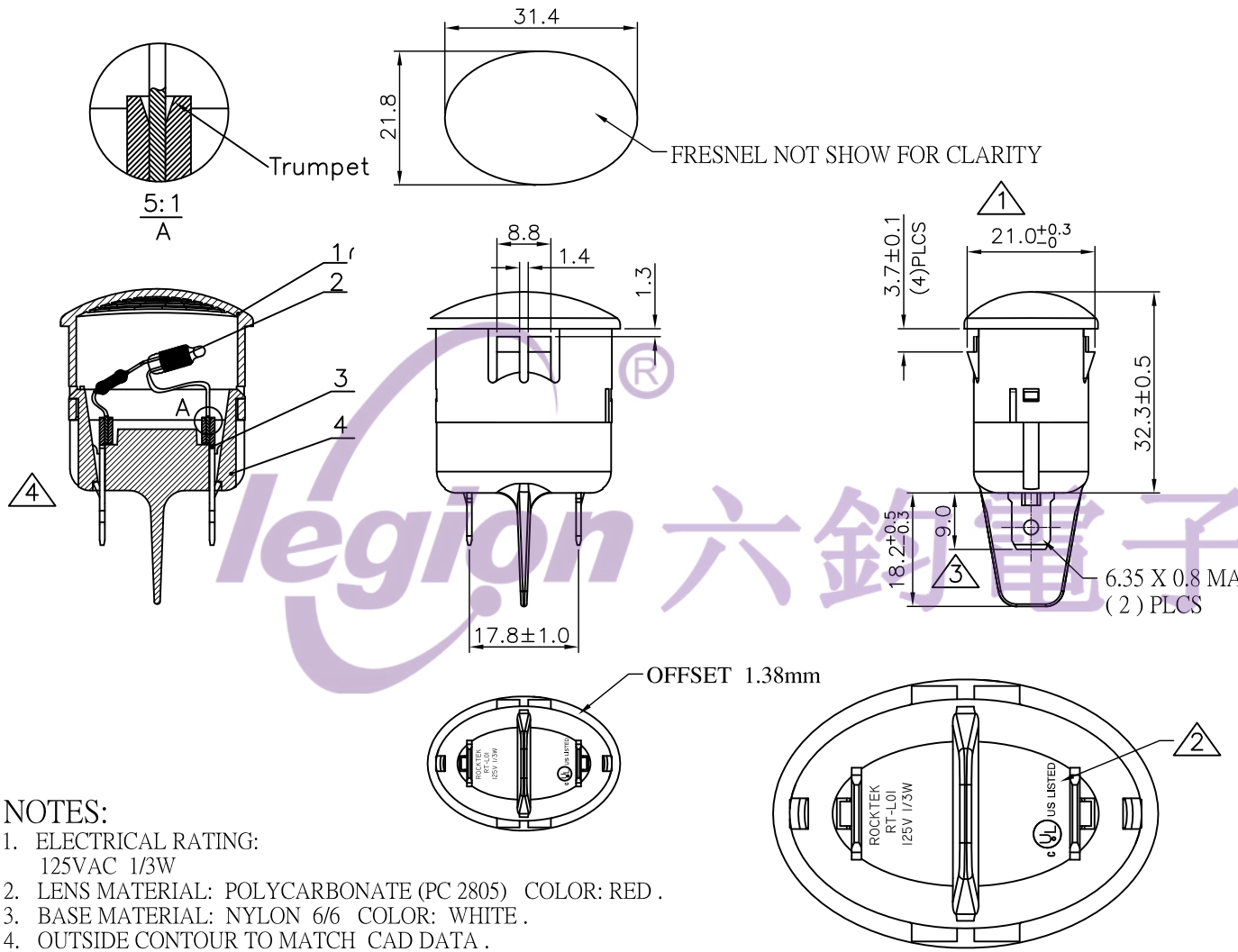

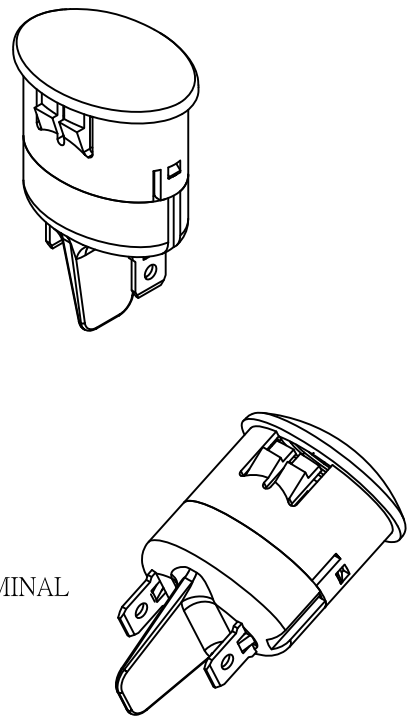

legion 六鈜電子 ®

SCALE 2:1

NOTES:

1. ELECTRICAL RATING:
   125VAC 1/3W
2. LENS MATERIAL: POLYCARBONATE (PC 2805) COLOR: RED .
3. BASE MATERIAL: NYLON 6/6 COLOR: WHITE .
4. OUTSIDE CONTOUR TO MATCH CAD DATA .
5. ASSEMBLY TO BE UL AND CUL APPROVED .
6. BULB TYPE: NEON (1) .
7. BULB LIFE: 500 HRS. MIN. WITH NO PERCEPTIBLE LOSS OF LIGHT OUTPUT .

NO.	Name	Material	Q' ty
04	Noumenon	PA66	1pcs
03	Terminal	C2680 1/2H	2pcs
02	Neon	/	1pcs
01	Cover	PC	1pcs

NO	DESCRIPTION	APPROVED	DATE
5	→		
4	增加剖面圖	李付彬	10-08-24
3	安規符號修改	李付彬	08-12-16
2	8.6 → 9.0	李付彬	08-10-09
1	21.0±0.2 → 21.0+0.3 -0	吳秋榮	07-03-13

DIMENSIONAL TOLERANCES	
RANGE	TOLERANCE
X	± 0.3
X.X	± 0.2
X.XX	± 0.1
ANGLES	± 1°

APPROVED	CHECKED	DESIGN	DRAWN
			LFB

ROCK TEK ELECTRICAL(SHENZHEN) CO.,LTD.

ALL SIZE ARE IN	MM
SCALE	FIT
MAT'L	
MATERIAL NO.	
RT-L01-1(CP65)	

DRAWING NO.	REV.
WIF107001	D