| REV | CONTENT | CHK | DATE |
|---|---|---|---|
| V0.0 | CONTENT | MYZ | 21.07.14 |

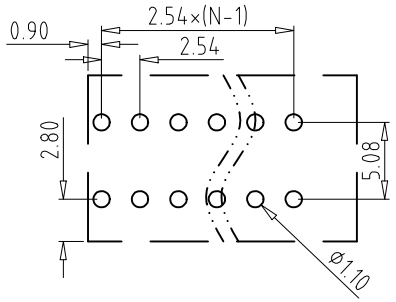


**PCB LAYOUT**

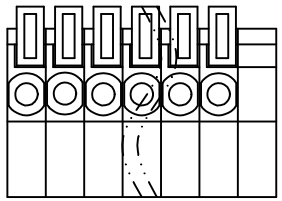

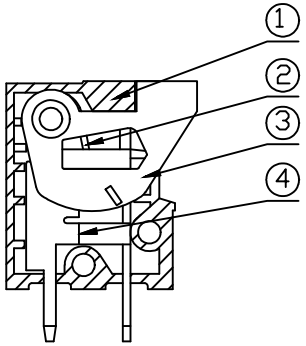


SECTION A-A

## Electrical :

| | UL | IEC |
|---|---|---|
| 1.Rated Voltage : | 150V | 130V |
| 2.Rated Current : | 2A | 6A |
| 3.Wire Range: | 24-20AWG | 0.2-1.0mm² |

4.Stripping Length : 10-11mm
5.Withstanding Voltage : AC1250V/1Min.
6.Operating Temperature : -40°C~+105°C
7.RoHS Compliance
8.Safty Approval : c UL us CE
9."★" is the key quality control point

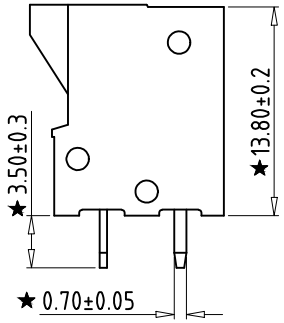


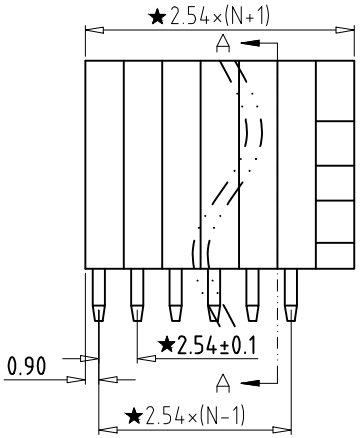


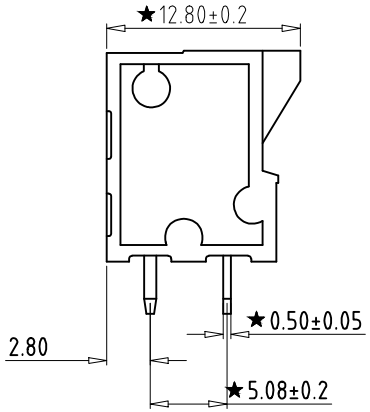


**TY141V - 2.54 -XXP - X X - 00**

① ② ③ ④ ⑤ ⑥

① Sereies NO.

② Pitch

③ Poles
02 02Contacts
03 03Contacts
...
24 24Contacts

④ 1 Single Pitch
2 Double Pitch

⑤ Color: 1 Grey
2 Blue
3 Black
4 Green
5 Orange
6 Red
7 Transparent
8 Yellow
9 White

⑥ Customer Request: 00--Standard

| ITEM | NAME OF PART | NO. OF PART | Q"TY | MATERIAL | NOTE |
|---|---|---|---|---|---|
| 4 | PIN | XX | N | BRASS | Tin Plated |
| 3 | Button | XX | N | POM UL94V-2 | SEE NOTE |
| 2 | Spring | XX | N | Stainless steel | / |
| 1 | HOUSING | XX | 1 | PA66 UL94V-0 | SEE NOTE |

| | | | | | | | |
|---|---|---|---|---|---|---|---|
| DWG. | MYZ | DATE | 21.07.14 | SIZE | A4 | UNITS mm | SHEET/OF 1 / 1 |
| CHK. | | DATE | | SCALE | 1:1 | | |
| APP. | | DATE | | NAME | TY141V-2.54-XXP-XX-00 | | |
| 拓宜(上海)工控电器设备有限公司 Topone(Shanghai) Industrial Control Electrical Equipment Co., LTD. | | | | DWGNO. | XXXX | | |

| Total Pitch Tolerances in mm | | | | | | | | | Nominal dimension range in mm | | | | | | | | | ⊥ | | ≒ | — | | // |
|---|---|---|---|---|---|---|---|---|---|---|---|---|---|---|---|---|---|---|---|---|---|---|---|
| over 0 to 30 | over 30 to 53 | over 53 to 70 | over 70 to 90 | over 90 to 115 | over 115 to 150 | over 150 to 250 | over 250 to 350 | over 350 to 500 | over 0 to 30 | over 30 to 53 | over 53 to 70 | over 70 to 90 | over 90 to 115 | over 115 to 150 | over 150 to 200 | over 200 to 250 | over 250 to 320 | over 0 to 10 | over 10 | all | over 0 to 100 | over 100 to 150 | over 150 |
| ±0.18 | ±0.20 | ±0.25 | ±0.3 | ±0.35 | ±0.44 | ±0.60 | ±0.70 | ±0.85 | ±0.20 | ±0.25 | ±0.30 | ±0.35 | ±0.44 | ±0.55 | ±0.70 | ±0.80 | ±0.90 | 0.2 | 0.3 | 0.3 | 0.2 | 0.3 | 0.5 |

REV:1.0