REV	CONTENT	CHK	DATE
V0.0	CONTENT	YL	22.11.16

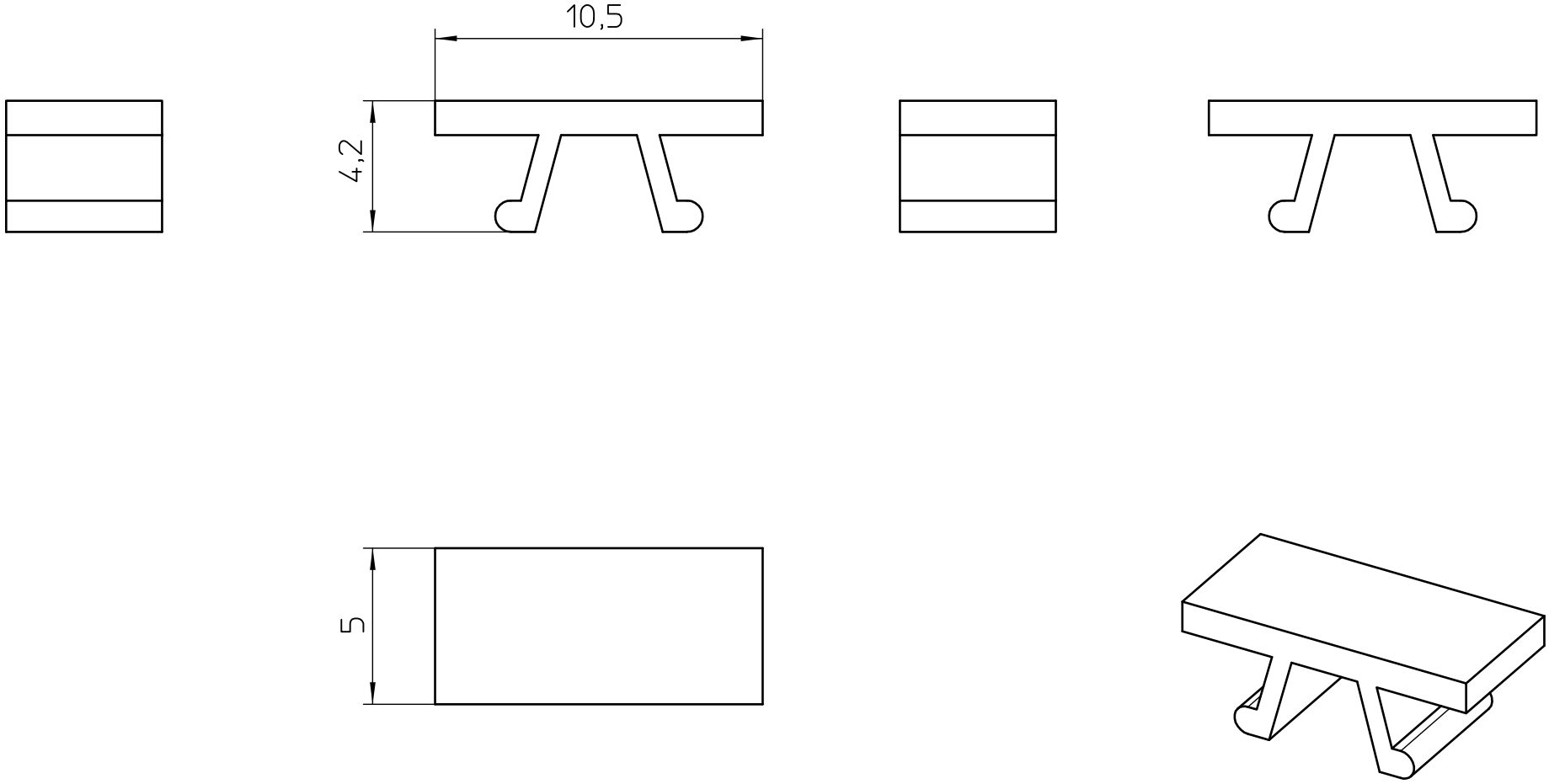

ITEM	NAME OF PART	NO. OF PART	Q"TY	MATERIAL	NOTE
5	SCREW	XX	N	STEEL	XX
4	BLOCK	XX	N	BRASS	XX
3	CLAMP	XX	N	PHOSPHOR BRONZE	XX
2	COVER	XX	1	PA66 UL94V-0	SEE NOTE
1	HOUSING	XX	1	PA66 UL94V-0	SEE NOTE

DWG.	YL	DATE	22.11.16	SIZE	A4	UNITS	mm	SHEET/OF 1 / 1
CHK.		DATE		SCALE	1:1			
APP.		DATE		NAME	ZB-5(1-10)			
拓宜(上海)工控电器设备有限公司 Topone(Shanghai) Industrial Control Electrical Equipment Co., LTD.				DWGNO.	XXXX			