ACAD GENERATED DRAWING. DON'T CHANGE BY HAND.

REV	ECN NO.	APPD
A	HG-20-0043	PRIOJOM

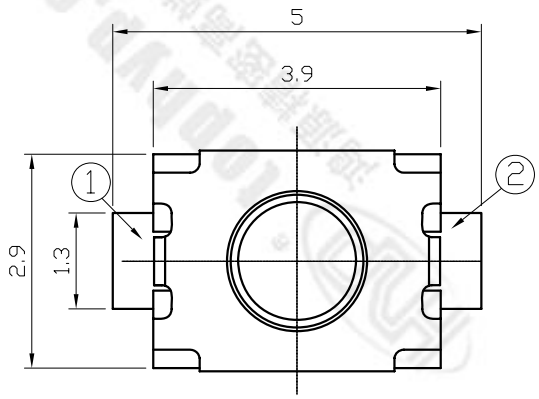

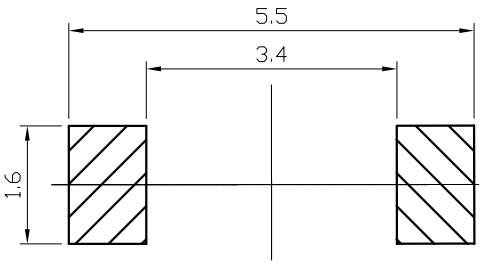

RECOMMENDED P.C.B. LAYOUT

安装尺寸图

规格 Specifications

额定负荷 Rating	DC 12V/50mA
接触电阻Contact Resistance	100mΩ max.
绝缘电阻Insulation resistance	DC100V 60S 100MΩ min.
抗电强度Dielectric strength	AC250V(50~60HZ) 60S min.
操作力Operation force	160±40gf
寿命试验Operating Life	100,000 cycles
行程Travels	0.20±0.1mm

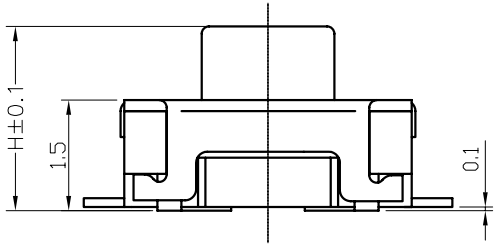

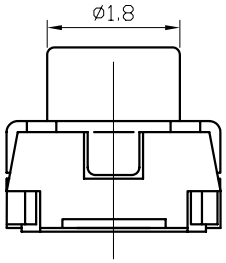

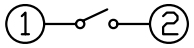

CIRCUIT DIAGRAM

回路图

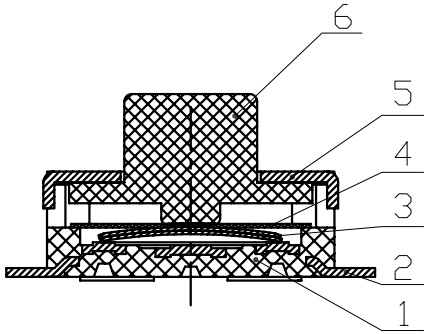

PRODUCT NO.: 1TS008A***-****-****A1 - CT

- 轻触开关
- 3X4立式小龟系列
- 外形:
- 按钮颜色:
- 底座颜色:
- 盖板颜色:
  - ⇩ 初始颜色，则不启用
- 操作力度:
  - 160=180gf
  - 180=180gf
  - 250=250gf
  - ⋮
- 手感:
  - 0=常规
  - 1=大手感
  - 2=小手感
- 产品高度(H):
  - 180=1.80mm
  - 200=2.00mm
  - 250=2.50mm
  - 300=3.00mm
- 材料:
  - 0=初始材料
  - 1=新增材料
  - 依次增加
- 编带
  - 非编带,不启用

ITEM	PART NAME	QUANTITY	MATERIAL	FINISH
6	ACTUATOR	1	LCP	BLACK
5	COVER	1	STAINLESS STEEL	/
4	TAPE	1	POLYIMIDE	/
3	DOME	2	STAINLESS STEEL	Ag-PLATED
2	TERMINAL	1	BRASS	Ag-PLATED
1	HOUSING	1	LCP	BLACK

X. ± 0.3	X.° ± 3°	UNITS MM	NAME(INTENDED USE) 3X4 SERIES TACT SWITCH
.X ± 0.2	.X° ± 2°	MAT'L	
.XX ± 0.1	.XX° ± 1°		PART NO.(INTENDED USE) 1TS008A-1600-2500A1-CT
.XXX ± 0.05	.XXX° ± 0.5°	FINISH	
		Q'TY	APPD: ZO 5/9'2020
			CHKD: M.H.Li 5/9'2020
			DR: Y.Y.Chen 5/9'2020

THESE DRAWINGS AND SPECIFICATIONS ARE THE PROPERTY OF HON YUAN PRECISION IND. CO., LTD. AND SHALL NOT BE REPRODUCED. COPIED OR USED IN ANY MANNER WITHOUT THE PRIOR WRITTEN CONSENT OF HON YUAN PRECISION IND. CO., LTD.

HON YUAN

HON YUAN PRECISION IND. CO.,LTD.
SHENZHEN, CHINA.

TITLE: PRODUCT DRAWING

DWG NO.: 1TS008A-1600-2500A1-CT

SCALE	SHEET	REV.
10/1	1/1	A