ACAD GENERATED DRAWING. DON'T CHANGE BY HAND.

REV	ECN NO.	APPD
A	HS-18-0035	PRIOJOM

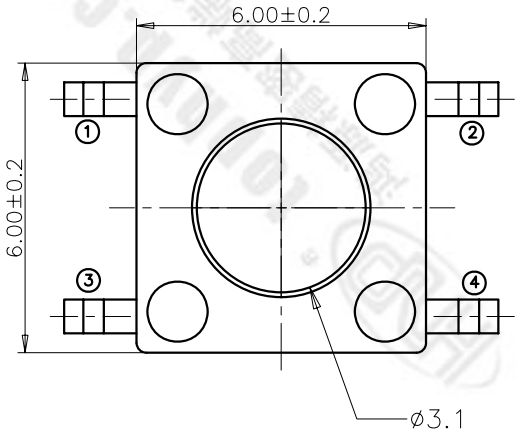

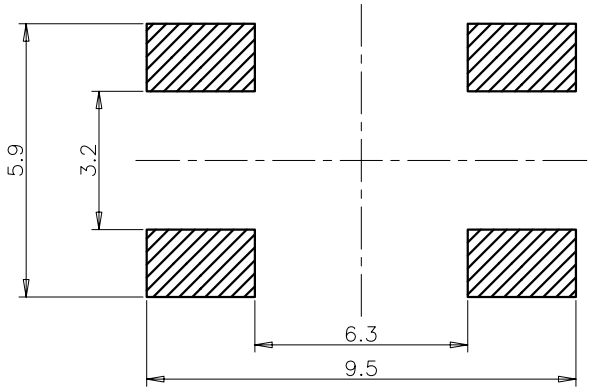

RECOMMENDED P.C.B. LAYOUT

安装尺寸图

规格 Specifications

额定负荷 Rating	DC 12V/50mA
接触电阻Contact Resistance	100mΩ max.
绝缘电阻Insulation resistance	DC100V 60S 100MΩ min.
抗电强度Dielectric strength	AC250V(50~60HZ) 60S min.
操作力Operation force	260±50gf
寿命试验Operating Life	100,000 cycles
行程Travels	0.25±0.1mm

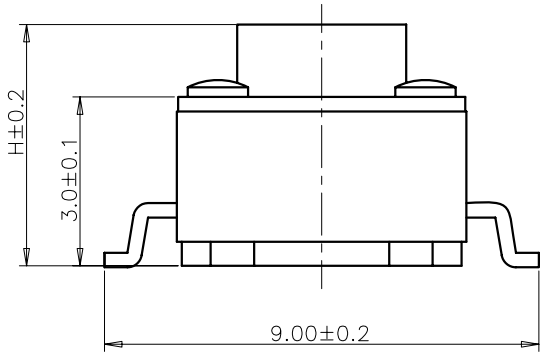

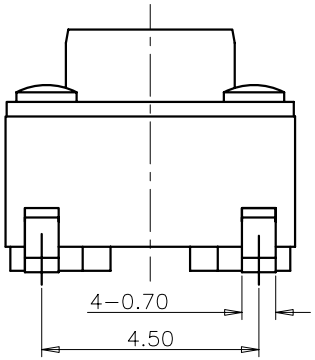

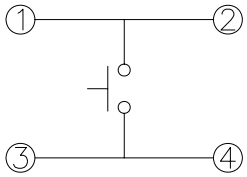

CIRCUIT DIAGRAM

回路图

PRODUCT NO.:1TS 005F***-***0-***0A2 - CT

- 轻触开关
- 系列
- 外形:
- 按钮颜色:
- 底座颜色:
- 盖板颜色:
  - ⇓ 初始颜色，则不启用
- 操作力度:
  - 120=120gf
  - 160=160gf
  - 200=200gf
  - 260=260gf
  - ⋮
- 手感:
  - 0=常规(弹片)
- 产品高度(H):
  - 430=4.3mm
  - 500=5.0mm
  - 600=6.0mm
  - 700=7.0mm
  - 800=8.0mm
  - 900=9.0mm
  - ⋮
- 材质:
  - 0=初始材质
  - 1=新增材质
  - 依次增加
- 编带
  - 非编带,不启用

ITEM	PART NAME	QUANTITY	MATERIAL	FINISH
5	COVER	1	BRASS	Ni-PLATED
4	ACTUATOR	1	PPA	BLACK
3	DOME	1	Stainless Steel/Ag	Ag-PLATED
2	TERMINAL	1	BRASS	Ag-PLATED
1	HOUSING	1	PPA	BLACK

X. ± 0.3	X.° ± 3°	UNITS MM	
.X ± 0.2	.X° ± 2°	MAT'L	
.XX ± 0.1	.XX° ± 1°		
.XXX ± 0.05	.XXX° ± 0.5°	FINISH	
		Q'TY	

THESE DRAWINGS AND SPECIFICATIONS ARE THE PROPERTY OF HON YUAN PRECISION IND. CO., LTD. AND SHALL NOT BE REPRODUCED. COPIED OR USED IN ANY MANNER WITHOUT THE PRIOR WRITTEN CONSENT OF HON YUAN

NAME(INTENDED USE)
6X6 SERIES
TACT SWITCH

HON YUAN
HON YUAN PRECISION IND. CO.,LTD.
SHENZHEN, CHINA.

PART NO.(INTENDED USE)
1TS005F-2600-5000A2

TITLE:
PRODUCT DRAWING

APPD: W.P.Lu 2018.3.31

DWG NO.:
1TS005F-2600-5000A2-CT

CHKD: S.L.Li 2018.3.31

DR: Y.Y.Chen 2018.3.31

SCALE	SHEET	REV.
10/1	1/2	A