REVISIONS					
REV.	ECN NO.	LOCATION	DESCRIPTION	DATE	DESIGN
A0	N/A		INITIAL RELEASE	2024.01.15	

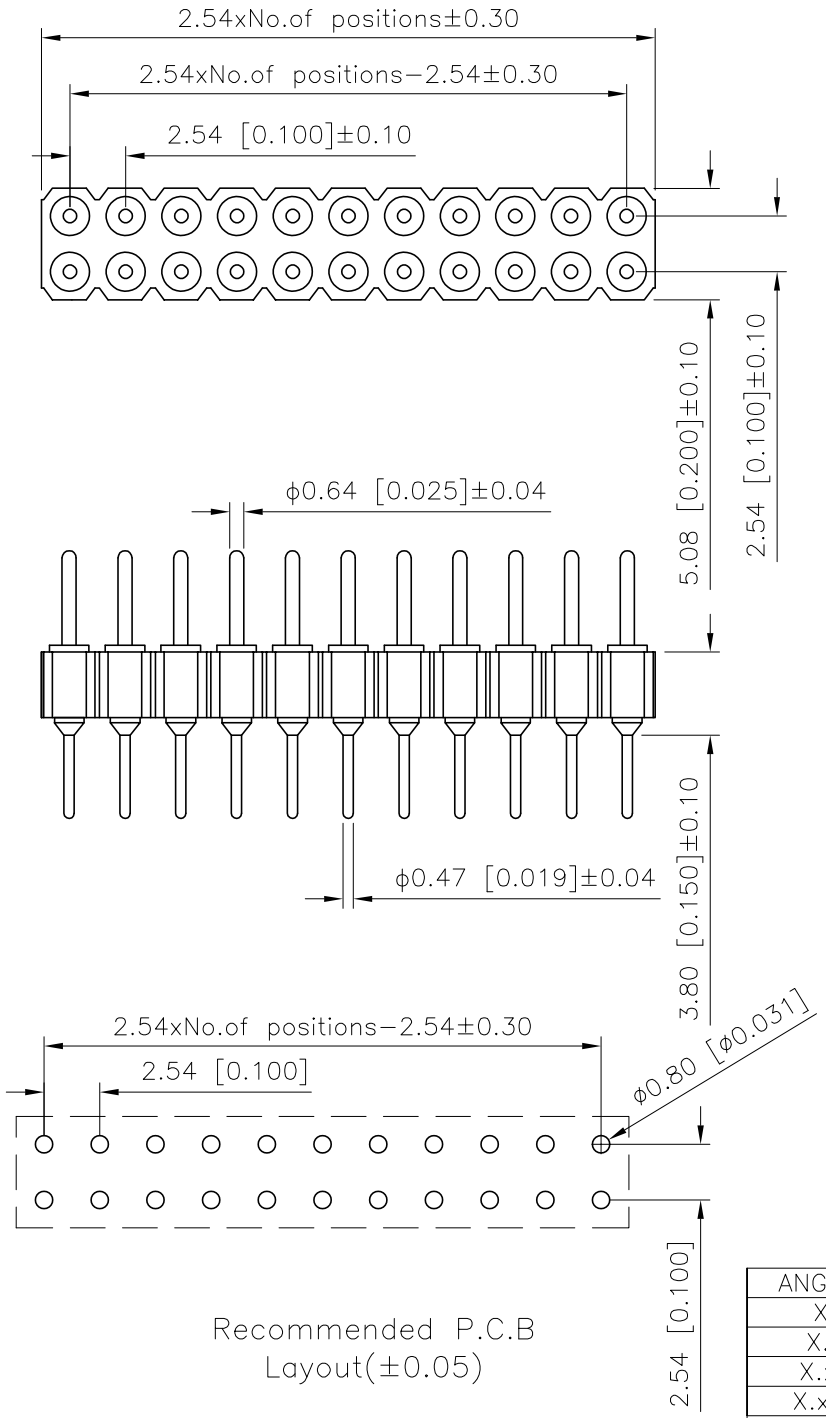

Recommended P.C.B Layout(±0.05)

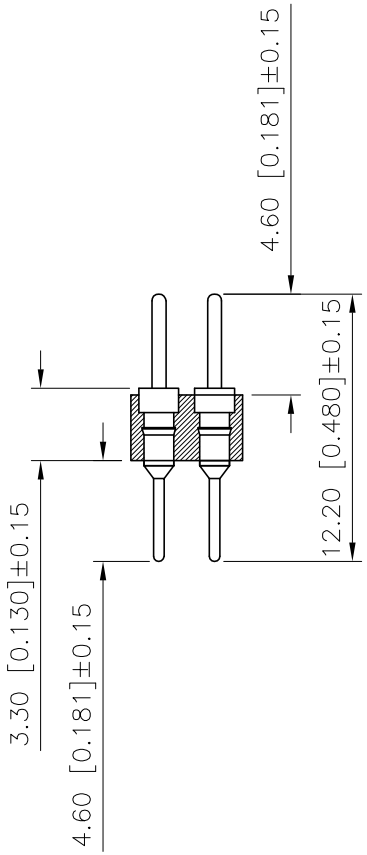

TECHNICAL DATE
PIN(OUTER SLEEVE):BRASS,MACHINED CuZn38Pb2
INSULATOR:PPS UL94V−0 COLOUR:BLACK
CURRENT RATING:3Amps
MATING PINø:0.47/0.64mm
CONTACT RESISTANCE: 10mΩ MAX
DIELECTRIC STRENGTH:1000V RMS
OPERALING TEMPERATURE:−40 ℃ TO +105℃
SOLDERING TEMPERATURE:+255℃

PART NO.:

X5521 W V−2xXX−C46 D46 1220
① ② ③ ④ ⑤ ⑥ ⑦

① Series No
② Category:W-Aafaer
③ Welding Board Angle:V-Straight 180°
④ Row No-Pin
⑤ Plastic Height:C=4.6mm
⑥ Pin Length:D=4.6mm
⑦ 1220:Type1220

X5521WV−2xXX−C46D46−1220	PPS 94V−0	BRASS	TIN/GOLD 1u"	X5521F
PART NO.	MATERIAL	MATERIAL(TERMINAL)	FINISH(TERMINAL)	MATES WITH XKB PIN HEADER

ANGLAR	±5°
X.	±0.40
X.x	±0.30
X.xx	±0.20
X.xxx	±0.15
UNSPECIFIED TOLERANCES	

XKB INDUSTRIAL PRECISION CO.,LIMITED

DESIGN	桑 甚	VIEW:	MODEL TYPE: 2.0mm Crimp Style Connector
CHECKED		UNIT: mm/in	PART NO.: X5521WV−2xXX−C46D46−1220
APPROVED		SIZE: A4	DWG NO.:

SCALE	PAGE	REVISION
N/A	1/1	A0