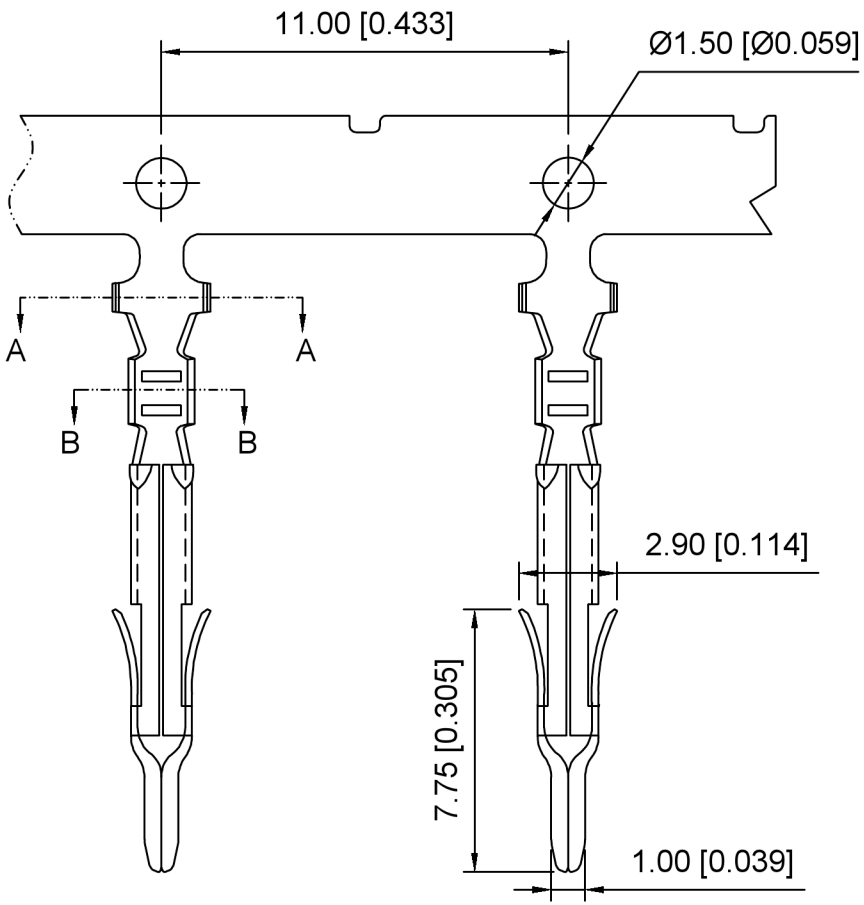

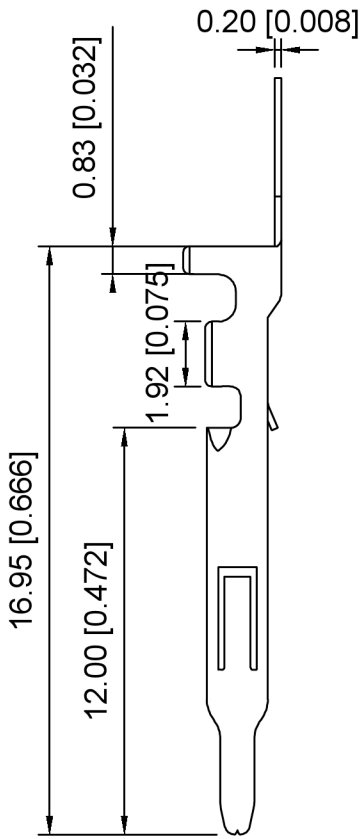

Specifications:
规格：
Voltage rating:600V AC/DC
额定电压：600V AC/DC
Current rating:7A AC/DC
额定电流：7A AC/DC
Withstanding voltage:1500V AC/minute
耐受电压：1500V AC/分钟
Temperature range:-40℃-+125℃
温度范围：-40℃-+125℃
Insulation resistance:1000MΩ min
绝缘电阻：1000MΩ min
Contact resistance:20mΩ max
接触电阻：20mΩ max

X4140 T M - B SN
① ②③④ ⑤

1.Series No
2.Category:T-Terminal
3.Category:M-Male Terminal
4.Material:B-Brass
5.Finish:SN-Tin-plated

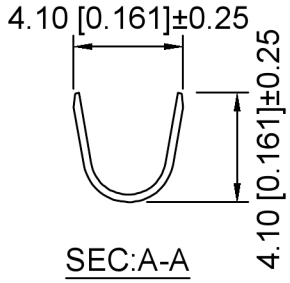

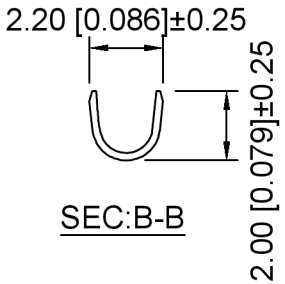

X4140TM-BSN	Brass	Tin-plated	AWG22#-26#	X4140HF
PART N0	Material	Finish	Wire Range	Suitable XKB Housing

					ANGLAR	±5°
ΔX					L≤ 4	±0.2
ΔX					4<L≤ 16	±0.3
ΔX					16<L≤ 63	±0.4
MARK	DESCRIPTION	DATE	REVISED	APPROVED	L> 63	±0.5

REVISIONS

UNSPECIFIED TOLERANCES

www.helloxkb.com www.helloxkb.cn www.xk-dg.cn

	DSND	SCALE: N/A
DWN		VIEW:
CHKD		UNIT: mm/in
APPD		SIZE: A4

MODEL TYPE: 4.14mm Crimp Style Connector

PART NO.: X4140TM-BSN

DWG NO.: X-X4140TM-BSN

XKB INDUSTRIAL PRECISION CO.,LIMITED

WEIGHT	SHEET	REVISION
	1/1	A0