RoHS

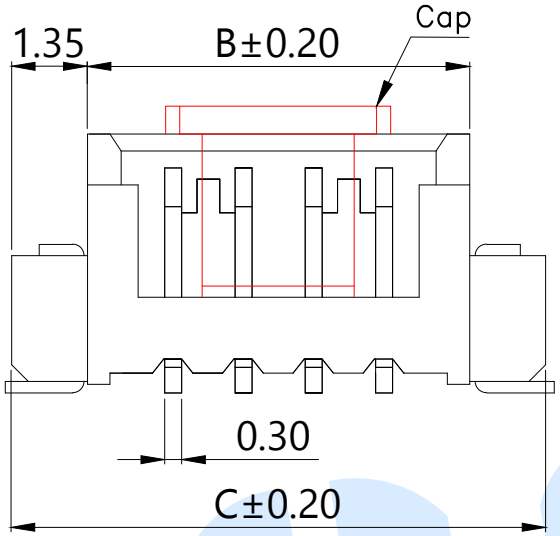

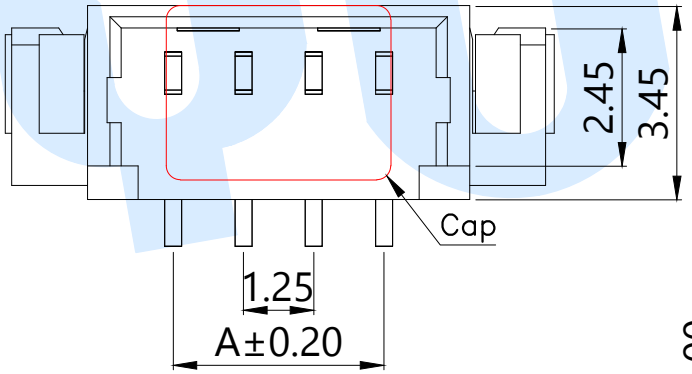

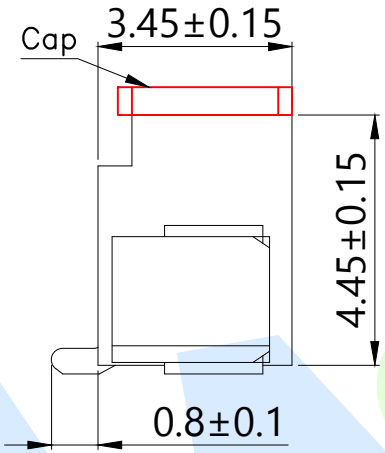

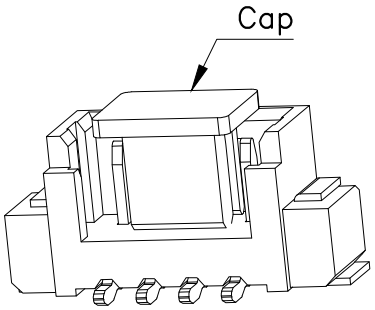

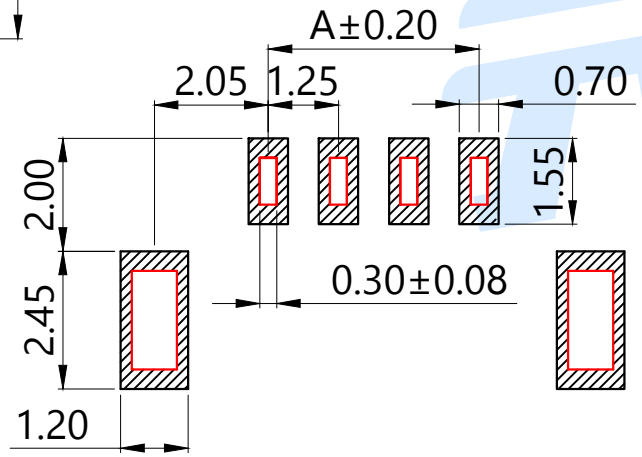

适用线路板(PCB LAYOUT)

Model No.	Pin	A	B	C
WAFER-MX1.25-2PLT-W1	2	1.25	4.30	7.00
WAFER-MX1.25-3PLT-W1	3	2.50	5.55	8.25
WAFER-MX1.25-4PLT-W1	4	3.75	6.80	9.50
WAFER-MX1.25-5PLT-W1	5	5.00	8.05	10.75
WAFER-MX1.25-6PLT-W1	6	6.25	9.30	12.00
WAFER-MX1.25-7PLT-W1	7	7.50	10.55	13.25
WAFER-MX1.25-8PLT-W1	8	8.75	11.80	14.50
WAFER-MX1.25-9PLT-W1	9	10.00	13.05	15.75
WAFER-MX1.25-10PLT-W1	10	11.25	14.30	17.00
WAFER-MX1.25-11PLT-W1	11	12.50	15.55	18.25
WAFER-MX1.25-12PLT-W1	12	13.75	16.80	19.50
WAFER-MX1.25-13PLT-W1	13	15.00	18.05	20.75
WAFER-MX1.25-14PLT-W1	14	16.25	19.30	22.00
WAFER-MX1.25-15PLT-W1	15	17.50	20.55	23.25
WAFER-MX1.25-16PLT-W1	16	18.75	21.80	24.50
WAFER-MX1.25-13PLT-W1	17	20.00	23.05	25.75
WAFER-MX1.25-14PLT-W1	18	21.25	24.30	27.00
WAFER-MX1.25-15PLT-W1	19	22.50	25.55	28.25
WAFER-MX1.25-16PLT-W1	20	23.75	26.80	29.50
WAFER-MX1.25-□□PLT-W1(-P=盘装,非盘装不启用)				

Specifications/技术规格:

1.Poles/线数：2～20P
2.Wire range/适用线规：AGW 32#～28#
3.Applicable PC board thickness/适用PC板厚度：0.6～1.2mm
4.Current rating/额定电流：1.0A
5.Voltage rating/额定电压：125V DC/AC
6.Insulation Resistance/绝缘电阻：100MΩ Min
7.Dielectric Withstanding/ 耐电压：500V AC/minute
8.Contact Resistance/ 接触电阻：20mΩ Max
9.Operating Temperature/ 工作温度：-25℃ to +85℃

NO.	Name	Number	Qty	Materil	Remarks
Ⓒ	Soldering lug		1	Brass	Plating Sn
Ⓑ	Terminal			Brass	Plating Sn
Ⓐ	Housing		1	LCP	Off White

YUANDI® Yuandi Electronics Co,Ltd

								angle	±2°		design		date	name	WAFER CONNECTOR
								10~30	±0.30		Review		date		
								5~10	±0.20		Approved		date	model	WAFER-MX1.25-□□PLT-W1
								~ 5	±0.10	Drawing number:					
				modify	Review	Approved	Tolerance not specified			Proportion	1:1	unit	mm	gape number	A4