RoHS

| REV | ECN NO. | DESRIPTION | DESIGN | APPROVAL | DATE |
|---|---|---|---|---|---|
| A1 | NEW | 更换图框 | | | 2024.05.24 |

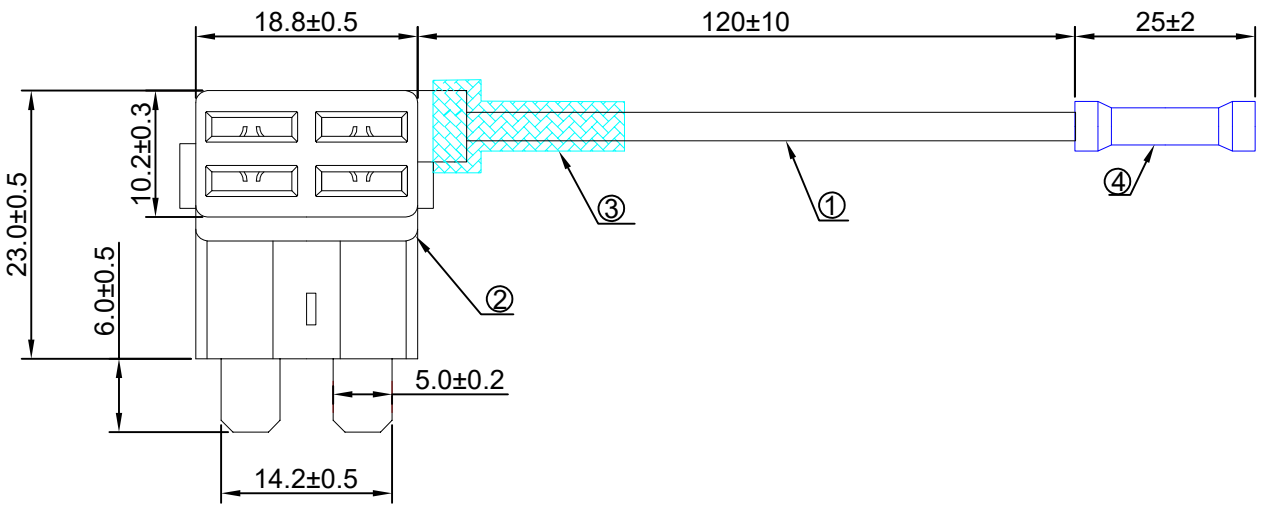


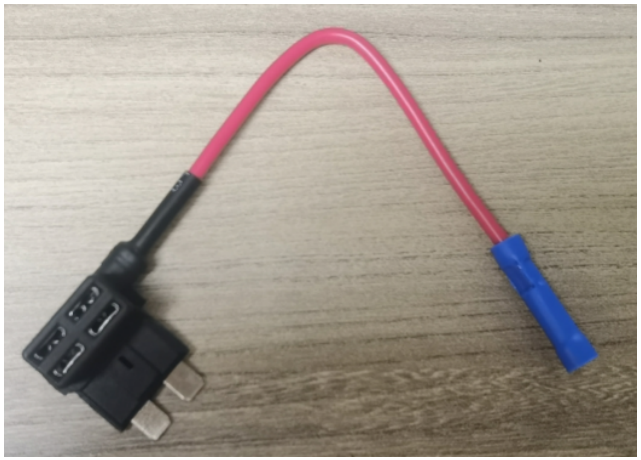

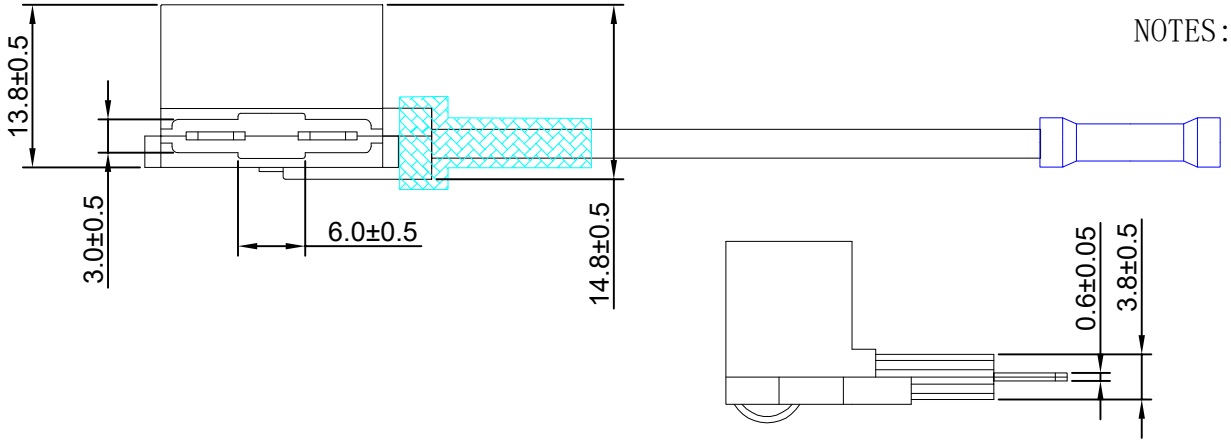


NOTES:UNLESS OTHERWISE SPECIFIED.

1. Applicable:For ATO/ATQ/QTC-N Fuse
2. Electrical:Rated for current up to 15A
3. Insulating body:PA
4. Contact:Brass with Tin plated
5. with other wiet sizes or leangths availableon special order
6. this inline fuseholder designed for turn one slot into two
7. Butt splice connector pull-out force min 15kg

| 序号 NO. | 部件 PARTS | 线材 端子（部件） 胶壳 Cable, Terminal (Part) Housing | 数量 Quantity |
|---|---|---|---|
| ④ | 端子 | Butt Splice connectors | 1PCS |
| ③ | 热缩管 | Heat shrink tubing | 1PCS |
| ② | 连接器 | 插片取电器 | 1PCS |
| ① | 线材 | UL1015 16AWG 红色 OD:3.1MM | 1PCS |

物料明细表 Material list

| | |
|---|---|
| X.±0.50 | X.°± |
| .X±0.25 | .X°± |
| .XX±0.15 | .XX°± |
| .XXX±0.10 | .XXX°± |
| UNITS: | mm |

THESE DRAWINGS AND SPECIFICATIONS ARE THE PROPERTY OF XFCN AND SHALL NOT BE REPRODUCED,COPIED OR CUED IN ANY MANNER WITHOUT THE PRIOR WRITTEN CONSENT OF XFCN

PART NO: XF-ACU-120-16

TITLE: FOR ATO/ATQ/QTC UL1015 16#红色 L=120MM

| | | | |
|---|---|---|---|
| APPD | Chen ZhiQiang | | |
| CHKD | Liu Wei | VIEW | |
| DRAW | Chen HongJiang | SCALE | SHEET / REV |
| DATE | 2024.06.04 | NONE | 1:1 / A1 |

XFCN兴飞连接器
0769-82001899
www.xfconn.com

DWG NO: /