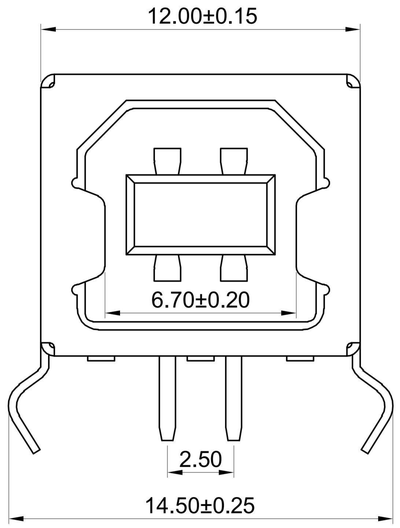

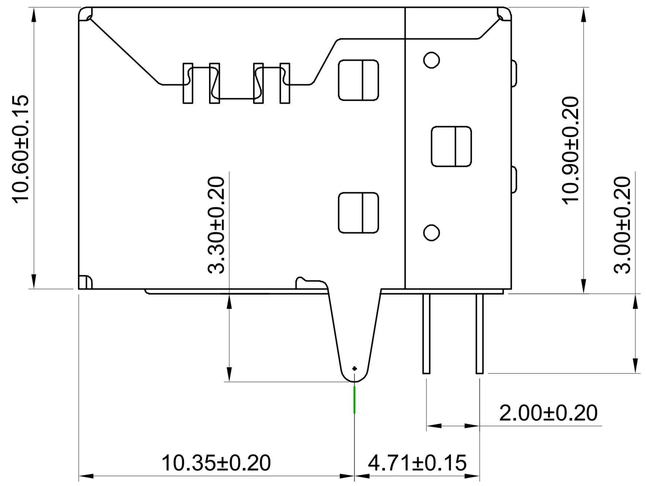

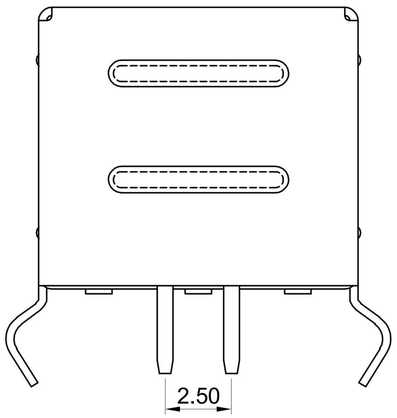

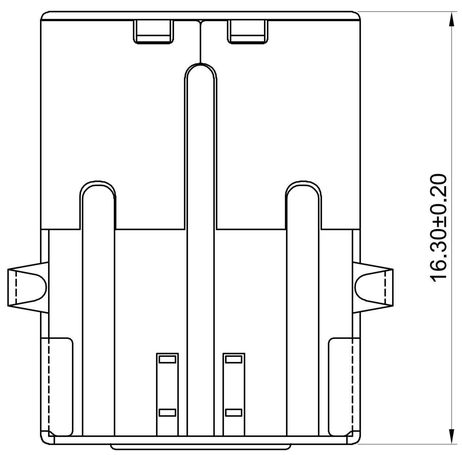

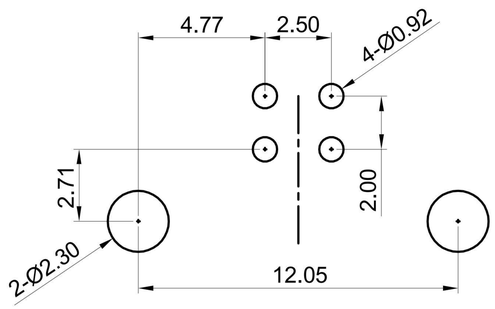

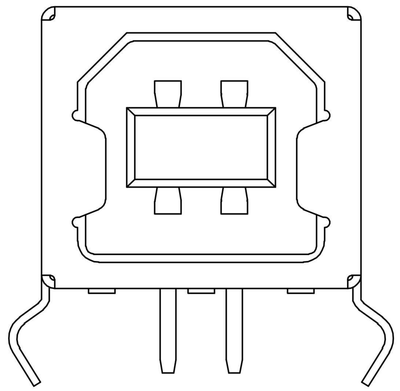

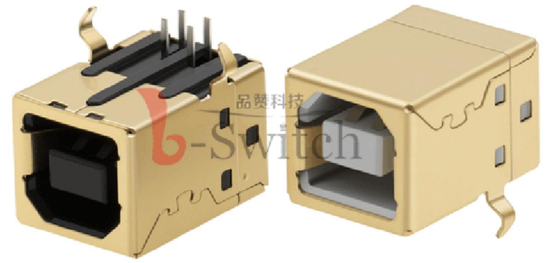

GT-USB-2014 - X X GX

- G-Switch
- USB系列
- 系列编码
- C=铜壳 I=铁壳
- W=白色 B=黑色 N=其它
- G1=1U

SPECIFICATION:
1. CURRENT RATING: 1.5A contact terminal
2. VOLTAGE RATING: 30V DC
3. TEMPERATURE RANGE: -55 °C ~ 85 °C
4. CONTACT RESISTANCE: 30 mΩ MAX.
5. DIELECTNIC WITHSTANDING VOITAGE:500V AC AT Sea Levol
6. INSULATION RESISTANCE: 1000 MΩ MIN
7. LNSERTION FORCE :3.75kgf(MAX)
8. UNMATING FORCE: 1.02kgf(MIN)
9.TERMINAL RETENION: 1.2kgf(MIN)
10. DURABILITY:3000 CYCLES

NO	Part name	Material
1	Housing	Hing Temperature Tnermaplastics, UI 94V-0 LCP White/Black
2	Contact	Copper Alloy C2680 GF
3	Shell	Copper Alloy S2680/SPCC Ni PLATING

Pb Process Capable

RoHS Compliant 2002/95/EC

HALOGEN Compliant Halogen Free

SCALE: 3:1	UNIT: mm	Title: USB B/F 90°DIP(Cabriole) 12×10.6×16.3mm			
SIZE: A4					
Unless otherwise General Tolerance: X. ±0.30, X.x ±0.20, X.xx ±0.15, X.xxx ±0.10, Angles ±3°		Molde Code: GT-USB-2014-XXGX			
		DRAWN	CHECKED	APPROVED	DATE
		Xia	Chen	Chen	2022.11.17

品赞科技 b-Switch ®

REV: A0 SHEET: 1/1