REV.	DESCRIPTION	ECN NO.	NAME	DATE

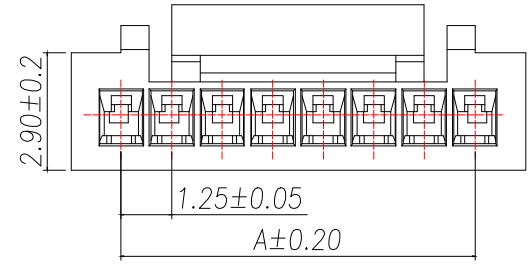

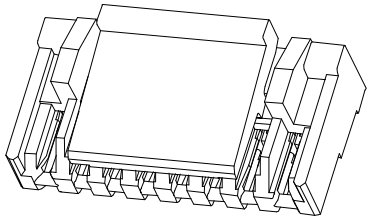

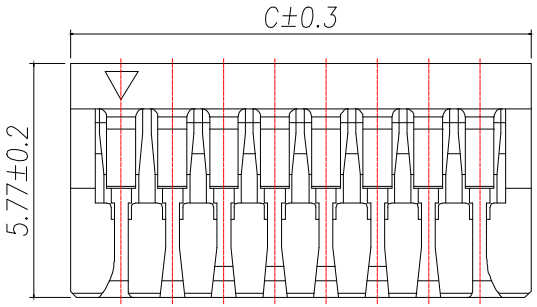

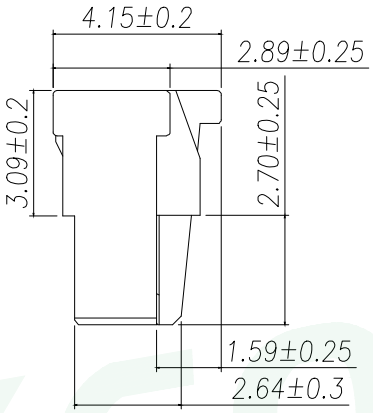

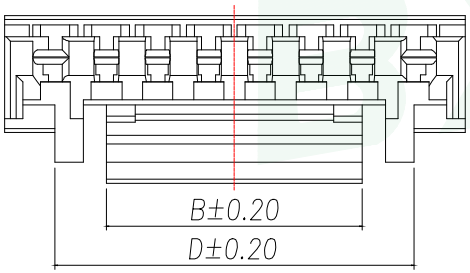

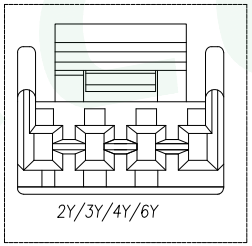

技术要求Specification:

1、材质Material: PA66 UL94V-0:
2、额定电流 Current rating:1.0A AC,DC
3、额定电压 Voltage rating: 50V AC,DC
4、温度范围 Temperature range:-25℃to+85℃
5、接触电阻 Contact resistance:<30mΩ
6、绝缘电阻Insulation resistance:>100MΩ
7、耐压Withstand voltage:500V AC/minute
8、塑件表面平整光洁，无明显的毛刺、气泡、变形、浇口拉伤、缺料等不良现象.
Plastic surface smooth and clean, no obvious burrsbubbles, distortion, gate strain, lack of material and otherundesirable phenomena.

Part No	Pin	A	B	C	D
WF-1D125B2P	2	1.25	2.00	3.75	
WF-1D125B3P	3	2.50	3.20	5.00	
WF-1D125B4P	4	3.75	4.30	6.25	
WF-1D125B5P	5	5.00	4.30	7.50	6.25
WF-1D125B6P	6	6.25	6.25	8.75	8.75
WF-1D125B7P	7	7.50	6.25	10.00	8.75
WF-1D125B8P	8	8.75	6.25	11.25	8.75
WF-1D125B9P	9	10.00	6.25	12.50	8.75
WF-1D125B10P	10	11.25	8.30	13.75	10.70
WF-1D125B11P	11	12.50	8.30	15.00	10.70
WF-1D125B12P	12	13.75	8.30	16.25	10.70
WF-1D125B13P	13	15.00	8.30	17.50	10.70
WF-1D125B14P	14	16.25	8.30	18.75	10.70
WF-1D125B15P	15	17.50	8.30	20.00	10.70
WF-1D125B16P	16	18.75	8.30	21.25	

GENERAL TOLERANCE

DIM.	TOL.
X	
X.X	±0.30
X.XX	±0.25
X.XXX	±0.15
GENERAL ANGLE:	±3°

DONGGUAN BAOXUN PRECISION TECHNOLOGY CO., LTD

BXCONN®

TITLE: GH1.25MM HOUSING

DWG. NO.: WF-1D125BNP

DRAWN: MAX

PART NO.: WF-1D125BNP

CHECKED: ELLA

UNIT:	SCALE:	SHEET:	DWG. SIZE:	LAYER:
mm	none	1of 1	A4	bxconn

APPROVED: WILL