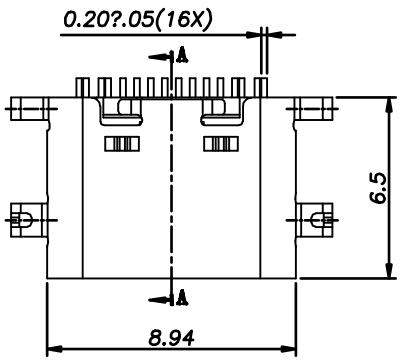

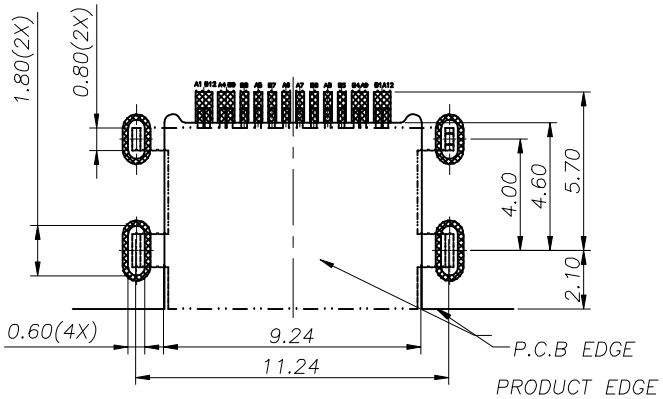

RECOMMENDED PCB LAYOUT(TOP VIEW)
THICKNESS 0.80MM;DEFAULT TOLERANCE:?.05

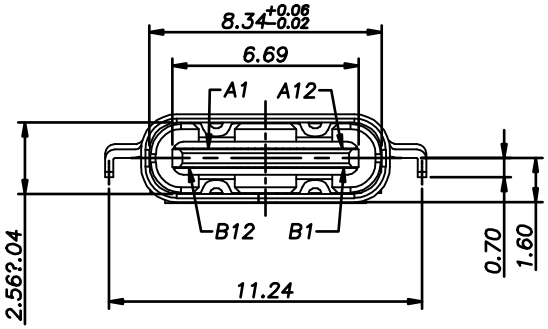

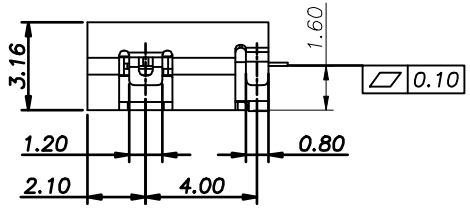

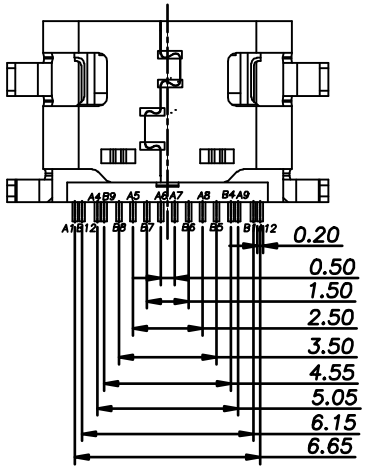

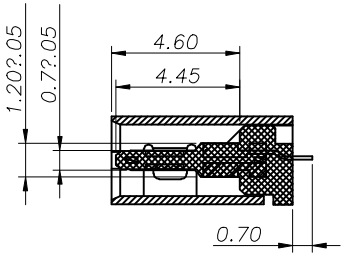

SECTION:A–A

NOTE:

1.MATERIAL SPECIFICATION:
  1.HOUSING:HIGH TEMPERATURE RESISTANT PLASTIC,UL94 V–0.
  2.CONTACTS:COPPER ALLOY
  3.MID PLATE: STAINLESS STEEL
  4.FRONT SHELL: STAINLESS STEEL

2.PLATING SPECIFICATION:
  2–1.CONTACTS:
  Ni 50u" MIN. UNDER PLATED OVER ALL.
  Au PLATED ON THE FUNCTIONAL AREA OF CONTACT.
  (GOLD PLATING THICKNESS FOLLOW THE P/N)
  PLATING SPECIFICATIONS OF THE SOLDER AREA FOLLOW THE P/N

2–2.FRONT SHELL:
  Ni 30u" MIN. UNDER PLATED OVER ALL.

2–3.MID PLATE:
  CLEAR ONLY

3.MECHANICAL PERFORMANCE,
  3–1.INSERTION FORCE: 0.5~1.5kgf.
  3–2.REMOVAL FORCE: 0.8kgf~1.5kgf.
  3–3.DURABILITY: 5000 CYCLES.

4.ELECTRICAL PERFORMANCE,
  4–1. CURRENT RATING:3.0A
  VOLTAGE RATING:5.0V
  4–2. LLCR:
  VBUS & GND PINS AND OTHER PINS: 40mΩ/PIN MAX.
  SHIELD: 50mΩ/MAX.
  LLCR MAX. CHANGE OF ALL PINS: 10mΩ.
  4–3.INSULATION RESISTANCE: 100MΩ MIN
  4–4.DIELECTRIC WITHSTAND VOLTAGE,AC 100V FOR 1 MINUTE.

5. ENVIRONMENTAL PERFORMANCE:
  OPERATING TEMPERATURE: –25℃~+85℃.

6.IR REFLOW:
  THE PEAK TEMPERATURE ON THE BOARD SHALL
  BE MAINTAINED FOR 10 SECONDS AT 260°C.

16XN-4BC21665

1:AU 1U"
6:AU 30U"
N:NICKEL

———		new		2015/5/3	A	瀚源
ECN BO.		DESCRIPTION.		DATE.	REV.	
DESIGNED	CHECKED	APPROVAL	DRAWING NUMBER		SCALT: 1/2	SCALE: 3:1
Mikey	Tom	Jerry	PART NAME	16XN-4BC21665	UNLESS OTHERWISE SPECIFIED,TOLERANCE:	X. ±0.25 X.x ±0.20 X.xx ±0.15 ANGULAIR ±3
			MODEL NAME	16XN-4BC21665		
			3RD ANGLE PROJ	HanElectricity Co.,LTD		FILE.NO.