SAMZO | REAC/ROHS

REV	ECN NO	DESRIPTION	DESIGN	APPROVAL	DATE
A1	NEW	Replace frame			2018.06.12

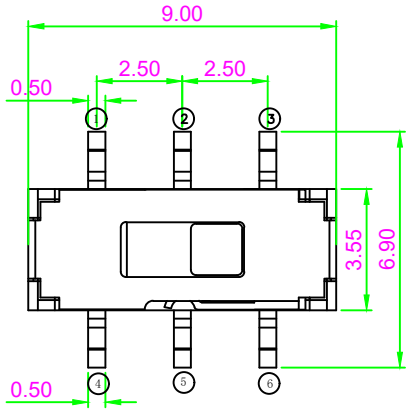

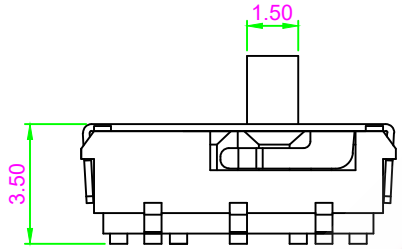

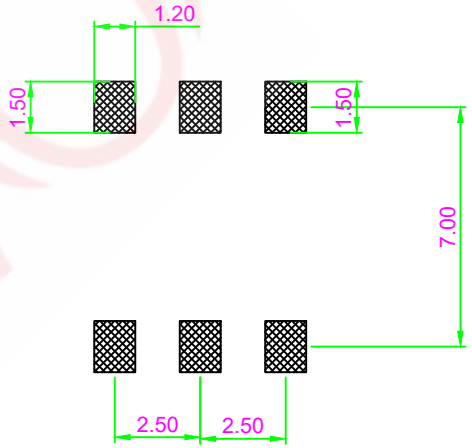

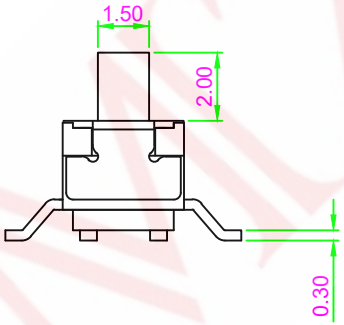

3	A	V	J	D	A	*	A	A
Ⓐ	Ⓑ	Ⓒ	Ⓓ	Ⓔ	Ⓕ	Ⓖ	Ⓗ	

A. 系列:3A-6P系列
B:模具号:V-C9.0
C.引脚规格:J-正六脚
D.贴装方式:D-立式贴片
E.操作挡位:A-两档
F:手柄高度:C-2.0/D-2.5mm
G:固定方式:A-无柱
H:物料编码:A-常规(确认待编)

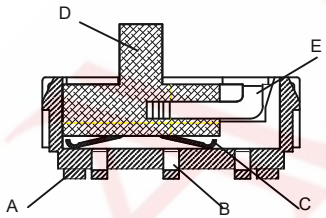

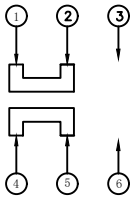

项目			标准
电气性能	额定电流	Rated Current:	50mA MAX
	额定电压	Rated voltage:	DC 12V
	接触电阻	Contact resistance:	≤70mΩ
	绝缘电阻	Insulation Resistance:	≥100MΩ
	耐压强度	Compressive strength:	AC250V 50Hz/1 min
机械性能	操作力度	Operating force:	200±50gf
	机械寿命	Mechanical life:	10,000 cycles Min
	操作行程	Operation Stroke:	2.0±0.1mm
环境性能	温度范围	Temperature Range:	-25°C ~ +70°C

ITEM	DESCRIPTION	MATERIAL	QTY	FINSH/COLOR					
E	盖板	不锈钢	1	清洗				GENERAL TOLERANCE	
D	手柄	PPA	1	黑色				≥0~2<	±0.15
C	簧片	铍青铜	1	镀银	DESIGN	WANGGUIFA	2018.06.12	≥2~5<	±0.25
B	卡件	黄铜	1	镀银	CHECKED	ZHENGUILAN	2018.06.12	≥0~2<	±0.15
A	基座	LCP	1	黑色	APPROVED	LILIANJIANG	2018.06.14	≥5	±0.35

FIRST VIEW

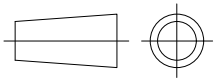

SCALE	1:1	UNIT	mm

The copyright belongs to samzo parts [China] Co., Ltd. please use the material after samzo parts agree to authorize. The final right of interpretation belongs to samzo parts.
WWW.KKK-JP.COM

SAMZO COMPONENTS
Electronic switch and connector manufacturer

TITLE:: 6P-立式-C900
DWG NO: 3AVJDA-P77
PART NO: 3AVJDA093
MODEL NO: 3AVJDA-*-AA
NAME: SLIDE SWITCH