SAMZO | REAC/ROHS

REV	ECN NO	DESRIPTION	DESIGN	APPROVAL	DATE
A1	NEW	Replace frame			2018.06.14

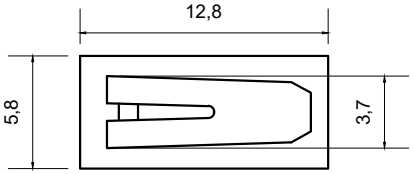

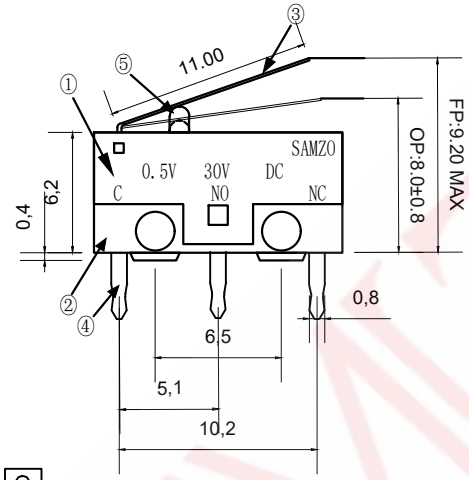

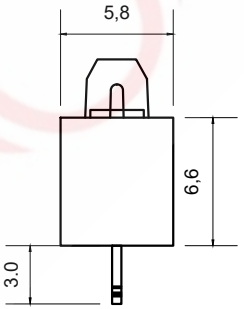

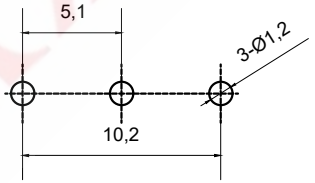

P.C.B

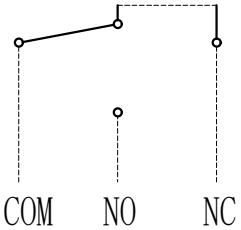

SCHEMATIC

4 B E B A Y H B 1 1 0

Ⓐ Ⓑ Ⓒ Ⓓ Ⓔ Ⓕ Ⓖ Ⓗ

A.系列:4B:12.8系列
B.贴装方式:E-3P DIP
C.操作方式:B:锌直柄
D.性能特性:A:0.5A 30V AC
E:触点镀层:Y-镀银
F:操作力度:H-70-90gf
G:使用寿命:B:500,000万次
H:压柄尺寸：110-11.0mm

Rating	DC30V 100mA	Electrical Life	1,00,000 cycles
Contact Resistance	500mΩ Max	Mechanical Life	1,000,000 cycles
Insulation Resistance	>50MΩ DC500V	Ambient Temper. Used	-25℃ to +85℃
Withstand Voltage	AC500V 1min.	Ambient Humidity Used	≤85% at +40℃
Soldering Temper.	235±5℃ 5s	Operating Force	90gf max

ITEM	DESCRIPTION	MATERIAL	QTY	FINSH/COLOR					
F	触点	银合金	1	XXX					
E	端子	C2680	3	镀银				GENERAL TOLERANCE	
D	弹片	C17200	1	进口高铍				≥0~2<	±0.15
C	按钮	PBT	1	白色	DESIGN	WANGGUIFA	2018.06.12	≥2~5<	±0.25
B	上盖	PBT	1	黑色	CHECKED	ZHENGUILAN	2018.06.12	≥0~2<	±0.15
A	底座	PBT	1	白色	APPROVED	LILIANJIANG	2018.06.14	≥5	±0.35

FIRST VIEW

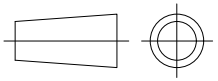

SCALE 1:1 UNIT mm

The copyright belongs to samzo parts [China] Co., Ltd. please use the material after samzo parts agree to authorize. The final right of interpretation belongs to samzo parts.
WWW.KKK-JP.COM

SAMZO COMPONENTS
Electronic switch and connector manufacturer

TITLE:：
12.8*5.8 微动开关

DWG NO：4BE1280-M091

PART NO：4BE110012100

MODEL NO：4BEBAYHB-110

NAME：
MICRO SWITCH