REV.	DESCRIPTION	ECN NO.	NAME	DATE

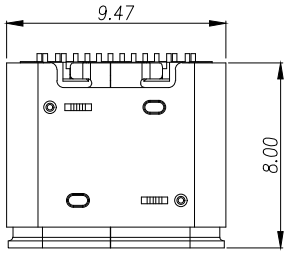

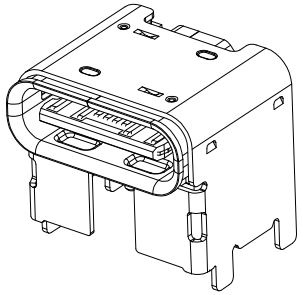

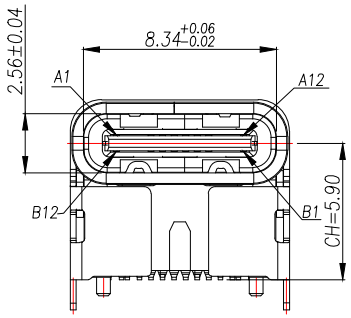

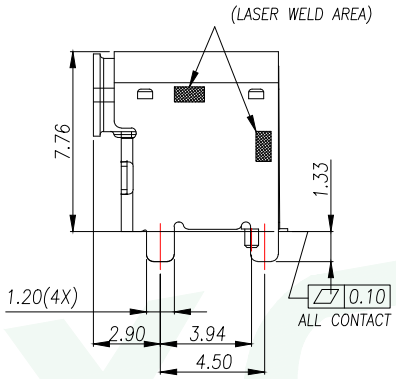

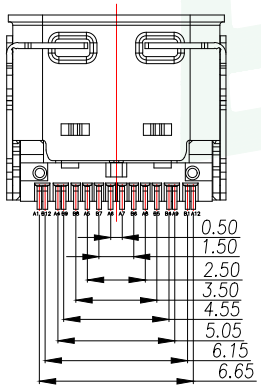

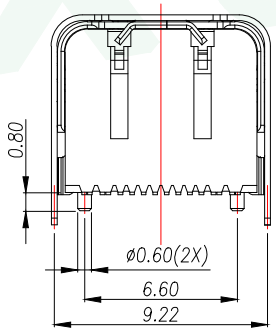

NOTE:

1.MATERIAL SPECIFICATION:
- 1.HOUSING:HIGH TEMPERATURE RESISTANT PLASTIC,UL94 V-0.
- 2.TERMINAL:COPPER ALLOY (C1814)
- 3.MID PLATE: STAINLESS STEEL (SUS301)
- 4.FRONT SHELL: STAINLESS STEEL (SUS304)
- 5.TOP SHELL: STAINLESS STEEL (SUS304)

2.PLATING SPECIFICATION:

2-1.CONTACTS:
Ni 50u" MIN. UNDER PLATED OVER ALL.
Au PLATED ON THE FUNCTIONAL AREA OF CONTACT.
CONTACT FUNCTIONAL AREA PLATED : Au G/F
CONTACT SOLDER AREA PLATED : Au G/F

2-2.FRONT SHELL&TOP SHELL:
Ni 30u" MIN. UNDER PLATED OVER ALL.

2-3.MID PLATE:
CLEAR ONLY

3.MECHANICAL PERFORMANCE,
3-1.INSERTION FORCE: 0.5~2.0kgf.
3-2.REMOVAL FORCE: 0.8kgf~2.0kgf.
3-3.DURABILITY: 10000 CYCLES.

4.ELECTRICAL PERFORMANCE,
4-1. VOLTAGE RATING:5 V DC/AC (RMS. max)
CURRENT RATING:5 AMPS. FOR TOTAL VBUS/GND PINS;
1.25AMPS FOR CC PIN,0.25 AMPS. FOR ALL OTHER CONTACT.

4-2. LLCR:
VBUS & GND PINS AND OTHER PINS: 40mΩ/PIN MAX.
SHIELD: 50mΩ/MAX.
LLCR MAX. CHANGE OF ALL PINS: 10mΩ.

4-3.INSULATION RESISTANCE: 100MΩ MIN
4-4.DIELECTRIC WITHSTAND VOLTAGE,AC 100V FOR 1 MINUTE.

5. ENVIRONMENTAL PERFORMANCE:
OPERATING TEMPERATURE: -40°C~+85°C.

6.IR REFLOW:
THE PEAK TEMPERATURE ON THE BOARD SHALL
BE MAINTAINED FOR 10 SECONDS AT 260°C.

GENERAL TOLERANCE	DONGGUAN BAOXUN PRECISION TECHNOLOGY CO., LTD				BXCONN®
DIM. TOL. X X.X ±0.30 X.XX ±0.25 X.XXX ±0.15 GENERAL ANGLE: ±3°	TITLE: USB C F 16PIN SMT CH=5.9				
	DWG. NO.: UC03-1B16F00P11			DRAWN: MAX	
	PART NO.: UC03-1B16F00P11			CHECKED: ELLA	
	UNIT: mm	SCALE: none	SHEET: 1of 1	DWG. SIZE: A4	LAYER: bxconn	APPROVED: WILL