REV.	DESCRIPTION	ECN NO.	NAME	DATE

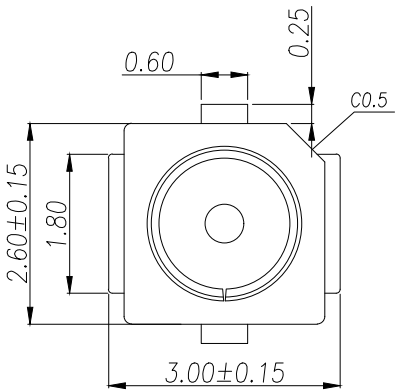

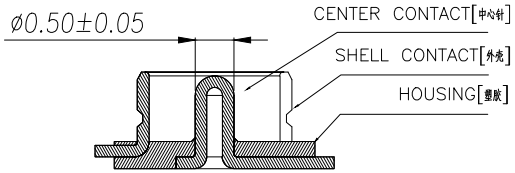

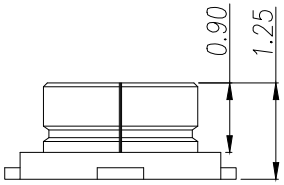

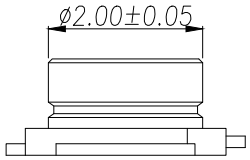

NOTES

1.0. RATING(???? :
- 1.1. VOITAGE(??? :60 VAC (R.M.S.)
- 1.2. NOMINAL CHARACTERISTIC IMPEDANCE(?????: 50 Ohm
- 1.3. APPLICABLE FREQUENCY??????: DC ~ 6GHz
- 1.4. VSWR(??????: 1.3 MAX. (DC~3GHz), 1.5 MAX. (3~6GHz)
- 1.5. TEMPERATURE(????? :-40°C TO +85°C
- 1.6. APPLIED TO IR SOLDERING PROCESS(?????????

2.0. MATERIAL SEE BILL OF MATERIAL (?????:
- 2.1.HOUSING????: THERMOPLASTIC LCP,UL94V-0(LCP??UL94V-0?,
- 2.2.CENTER CONTACT: COPPER ALLOY C5191
- 2.3.SHELL CONTACT????: COPPER ALLOY C5191(???C5191?.

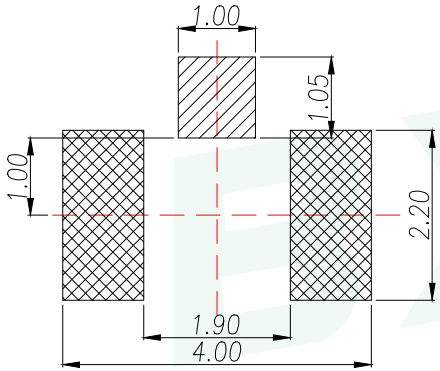

RECOMMENDED PCB LAYOUT

(TOLERANCE:±0.05)

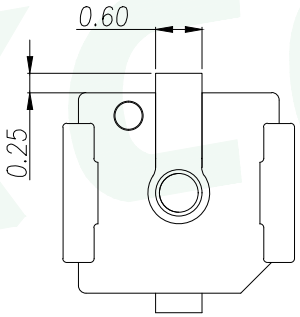

CENTER CONTACT

GROUND CONTACT

GENERAL TOLERANCE	DONGGUAN BAOXUN PRECISION TECHNOLOGY CO., LTD				BXCONN®
DIM. TOL. X X.X ±0.30 X.XX ±0.25 X.XXX ±0.15 GENERAL ANGLE: ±3°	TITLE: MICRO RF I BAORD SMT 3 PADS TYPE				
	DWG. NO.: IPEX-01			DRAWN: MAX	
	PART NO.: IPEX-01			CHECKED: ELLA	
	UNIT: mm	SCALE: none	SHEET: 1of 1	DWG. SIZE: A4	LAYER: bxconn	APPROVED: WILL