TECH PUBLIC
台舟电子

NC7S86M5X,NC7S86P5X
2-input EXCLUSIVE OR Gate

WWW.SOT23.COM.TW

Features

- Operate from 2.0V to 6.0V
- Same electrical characteristics as 74HC Series
- | IOH | = IOL = 2mA (min)
- SOT23-5 Package Available

Applications

- AV Receiver
- Audio Dock:Portable
- Blu-ray Player and Home Theater
- Embedded PC
- Personal Digital Assistant(PDA)
- Power:Telecom/Server AC/DC Supply:Single Controller:Analog and Digital
- Solid State Drive(SSD):Client and Enterprise
- Wireless Headset,Keyboard,and Mouse

General Description

ELM7S86 are CMOS 2-input EXOR gate ICs. They realize a high speed operation similar to LS TTL with a lower power consumption by CMOS features. An inner circuit structure of 3-stages logic gates obtains a wider noise immunity and a constant output.

Logic Diagram



Logic symbol

Ordering Information

ORDER NUMBER	PACKAGE DESCRIPTION	PACKAGE OPTION	Marking
NC7S86M5X	SOT23-5	Tape and Reel,3000	7S86F
NC7S86P5X	SOT353	Tape and Reel,3000	S86Z

Pin Configuratio

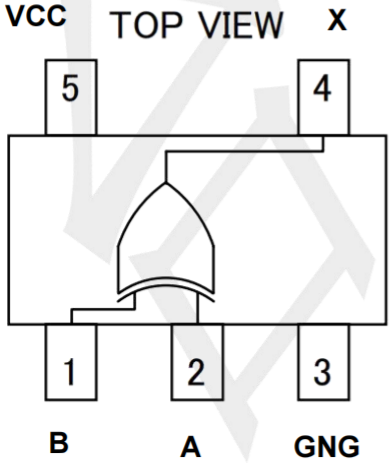

Function Table

INPUT(B)	INPUT(A)	OUTPUT(X)
L	L	L
H	L	H
L	H	H
H	H	L

Note:H: HIGH voltage level;L: LOW voltage level.

Absolute Maximum Ratings

PARAMETER	SYMBOL	CONDITIONS	RATINGS	UNIT
Supply Voltage	V_{CC}		-0.5 ~ +7	V
Input Voltage	V_{IN}		-0.5 ~ $V_{CC+0.5}$	V
Output Voltage	V_{OUT}	Output in the Power-off state	-0.5 ~ $V_{CC+0.5}$	V
		Output in the High or Low state	-0.5 ~ $V_{CC+0.5}$	V
VCC / GND Current	$I_{CC,IGND}$		±25	mA
Continuous Output Current	I_{OUT}	V_{OUT}=0~V_{CC}	±25	mA
Input Clamp Current	I_{IK}	V_{IN}<0	±20	mA
Output Clamp Current	I_{OK}	V_{OUT}<0	±20	mA
Storage Temperature Range	T_{STG}		-65 ~ +150	℃
Power Dissipation	PD	SOT-23-5	200	mW

Recommended Operating Conditions

PARAMETER	SYMBOL	TEST CONDITIONS	MIN	TYP	MAX	UNIT
Supply Voltage	V_{CC}	Operating	2	--	6.0	V
Input Voltage	V_{IN}		0	--	VCC	V
Output Voltage	V_{OUT}		0	--	VCC	V
High-input,Down-time	Tr,tf	VCC=2.0V	0	--	1000	ns
		VCC=4.5V	0	--	500	ns
		VCC=6.0V	0	--	400	ns
High-Output,Down-time	tTLH	Refer to following test circuit CL=15pF,tr=tf=6ns,VCC=5V	--	7	10	ns
	tTHL		--	7	10	ns
Propagation,Down-time	tPLH		--	9	20	ns
	tPHL		--	9	20	ns
Operating Temperature	T_{OP}		-40	--	+85	℃

Electrical Characteristics (TA =25°C, unless otherwise specified)

PARAMETER	SYMBOLt PLH	TEST Conditions	TA=25°C			TA=-40°C~+125°C			UNIT
			MIN	TYP	MAX	MIN	TYP	MAX	
High-Level Input Voltage	VIH	Vcc=2.0V	1.5	--	--	1.5	--	--	V
		Vcc=4.5V	3.15	--	--	3.15	--	--	V
		Vcc=6.0V	4.2	--	--	4.2	--	--	V
Low-Level Input Voltage	VIL	Vcc=2.0V	--	--	0.5	--	--	0.5	V
		Vcc=4.5V	--	--	1.35	--	--	1.35	V
		Vcc=6.0V	--	--	1.8	--	--	1.8	V
High-Level Output Voltage	VOH	Vcc=2.0V, IOH=-20μA	1.9	2.0	--	1.9	--	--	V
		Vcc=4.5V, IOH=-20μA	4.4	4.5	--	4.4	--	--	V
		Vcc=6.0V,IOH=-20μA	5.9	6.0	--	5.9	--	--	V
		Vcc=4.5V, IOH=-2mA	4.18	4.31	--	4.13	--	--	V
		Vcc=6.0V,IOH=-2.6mA	5.68	5.80	--	5.63	--	--	V
Low-Level Output Voltage	VOL	Vcc=2.0V, IOH=20μA	--	0.0	0.1	--	--	0.1	V
		Vcc=4.5V, IOH=20μA	--	0.0	0.1	--	--	0.1	V
		Vcc=6.0V,IOH=20μA	--	0.0	0.1	--	--	0.1	V
		Vcc=4.5V, IOH=2mA	--	0.17	0.26	--	--	0.33	V
		Vcc=6.0V,IOH=2.6mA	--	0.18	0.26	--	--	0.33	V
Input Current	IIN	VCC=6V,VIN=VCC or GND	--	±0.1	±0.1	--	±0.1	±1.0	uA
Static Current	Icc	VCC=6V,VIN=VCC or GND	--	--	1.0	--	--	10	uA
High-Output,Down-time (CL=50PF, tr=tf=6ns)Refer to test circuit	tTLH	Vcc=2.0V,Refer to test circuit	--	50	125	--	--	155	**ns**
		Vcc=4.5V,Refer to test circuit	--	14	25	--	--	31	**ns**
		Vcc=6.0V,Refer to test circuit	--	12	21	--	--	26	**ns**
	tTHL	Vcc=2.0V,Refer to test circuit	--	50	125	--	--	155	**ns**
		Vcc=4.5V,Refer to test circuit	--	14	25	--	--	31	**ns**
		Vcc=6.0V,Refer to test circuit	--	12	21	--	--	26	**ns**
Propagation,Down-time (CL=50PF, tr=tf=6ns)	tPLH	Vcc=2.0V,Refer to test circuit	--	60	135	--	--	170	**ns**
		Vcc=4.5V,Refer to test circuit	--	16	27	--	--	34	**ns**
		Vcc=6.0V,Refer to test circuit	--	10	22	--	--	28	**ns**
	tPHL	Vcc=2.0V,Refer to test circuit	--	60	135	--	--	170	**ns**
		Vcc=4.5V,Refer to test circuit	--	16	27	--	--	34	**ns**
		Vcc=6.0V,Refer to test circuit	--	10	22	--	--	28	**ns**
Input Capacitance	CIN		--	5	10	--	--	10	pF
Equivalent Inner Capacity	CPD		--	10	--	--	--	--	pF

TEST CIRCUIT AND WAVEFORMS

TEST CIRCUIT

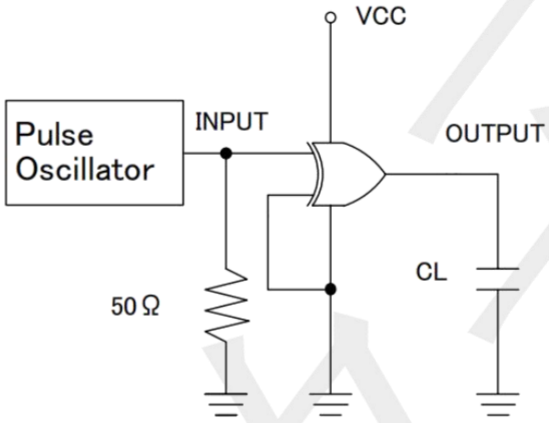

* Output should be opened when measuring current consumption.

MEASURED WAVE PATTERN

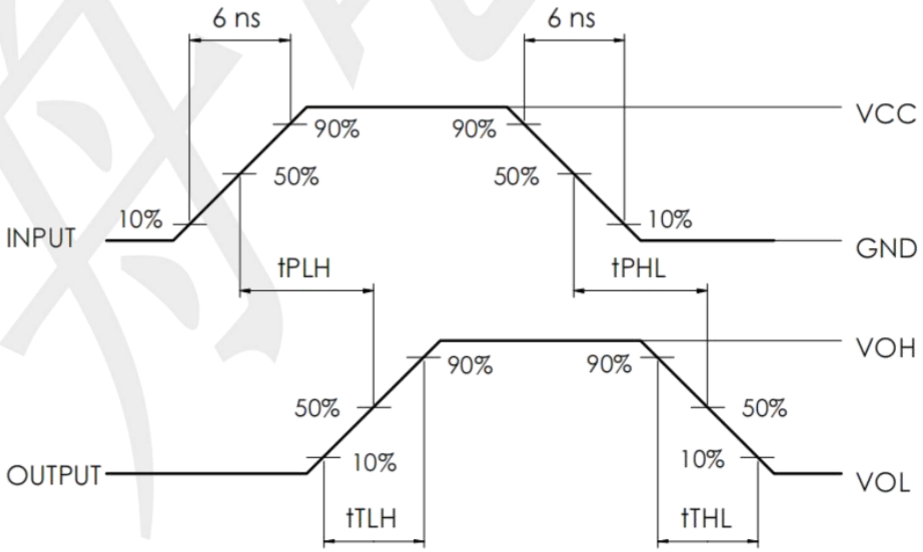

Package information

SOT23-5 (Unit: mm)

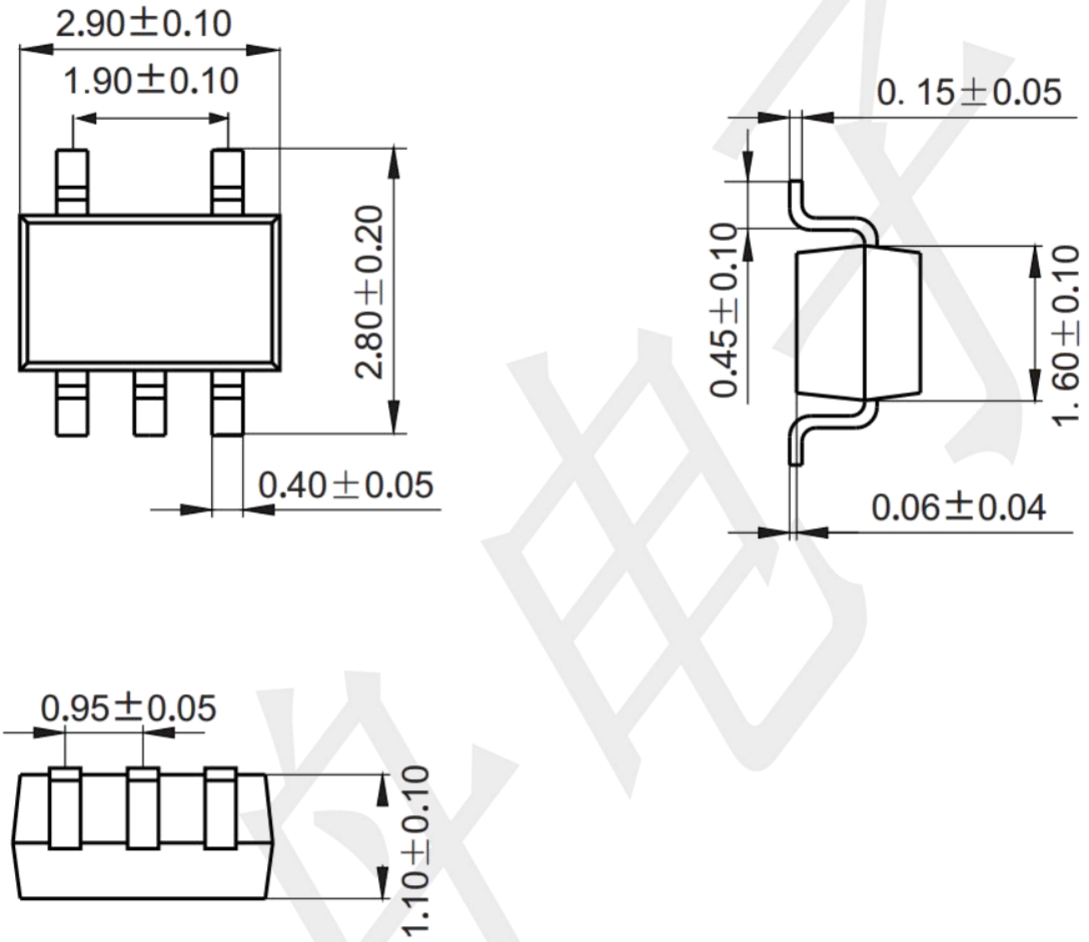

Mounting Pad Layout (Unit: mm)

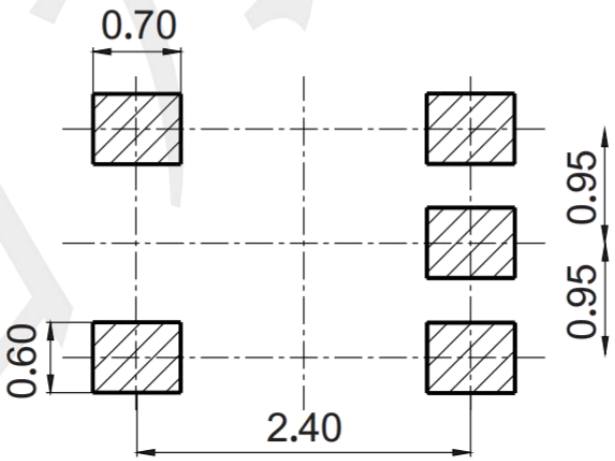

Package information

SOT353 (Unit: mm)

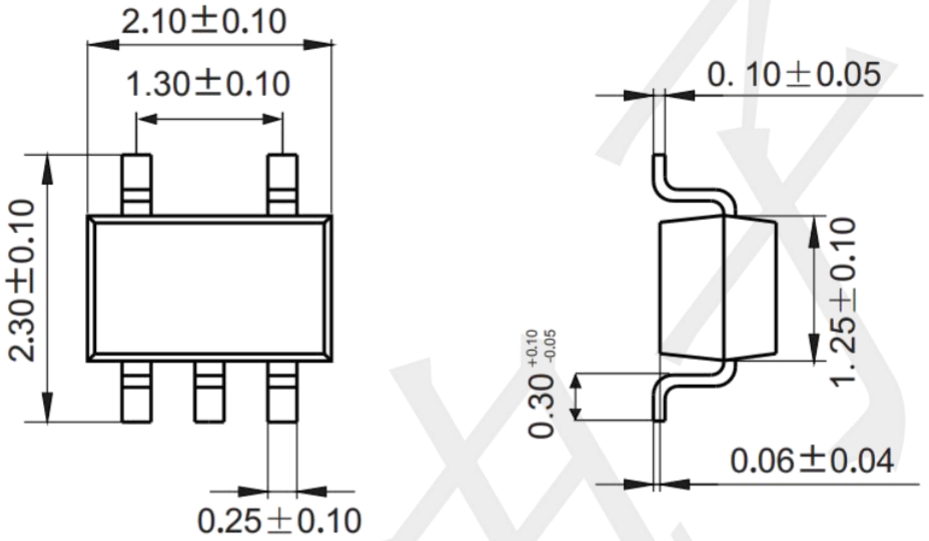

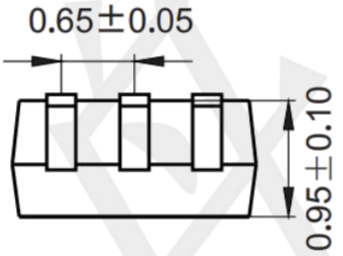

Mounting Pad Layout (unit: mm)

