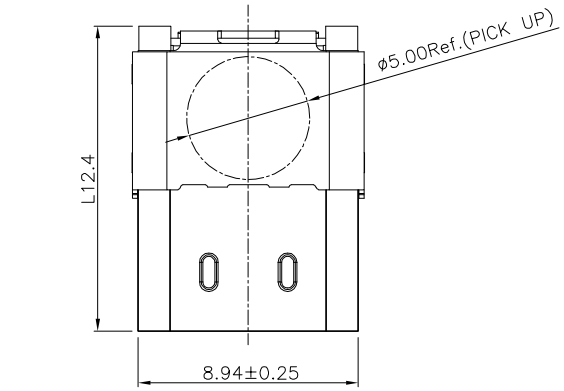

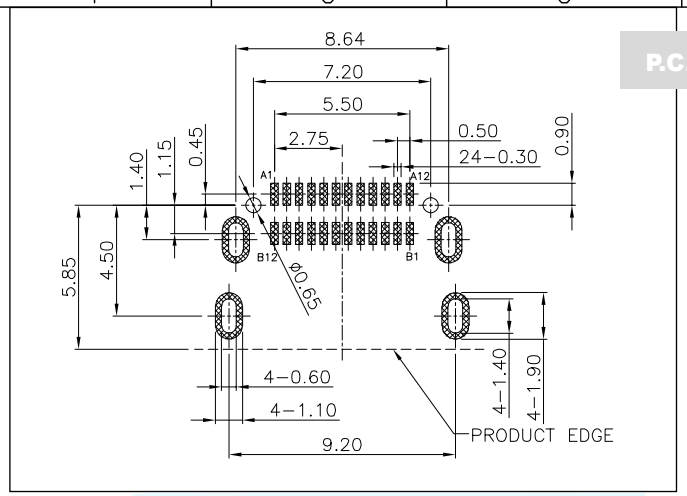

REVISION			
LTR	DESCRIPTION	DATE	APP
A0	NEW RELEASE	05/20/2020	PECK

Material declaration

No	NAME	MATERIAL	DESCRIPTION
①	TERMINAL 接触端子	COPPER ALLOY 【G/F】	2.0μm Ni PLATED OVERALL 0.25μm Au PLATED CONTACT AREA GOLD FLASH ON SOLDER AREA
②	HOUSING 基座	THERMOP LASTIC	UL 94V-0,COLOR:BLACK;
③	SHIELDIN G PLATE 屏蔽壳	STAINLESS STEE	【G/F】0.25μm Ni PLATED OVERALL;
④	SHELL 外壳	STAINLESS STEE	【G/F】0.25μm Ni PLATED OVERALL;
⑤	GND RING 接地件	STAINLESS STEE	STAINLESS STEEL;

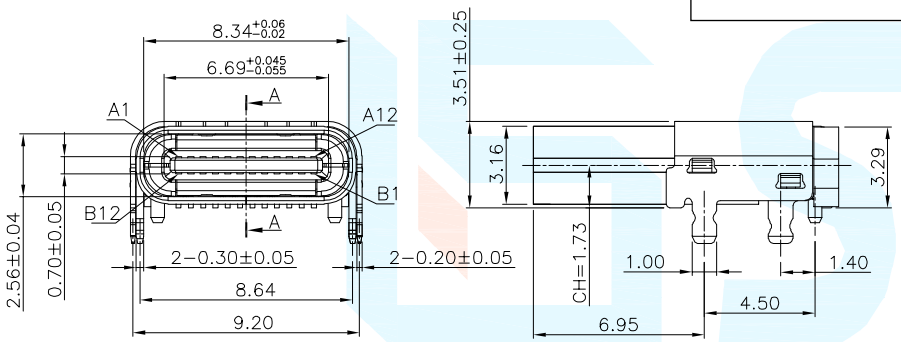

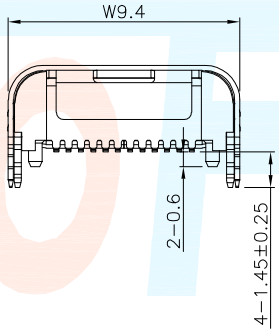

PIN	Signal NAME	PIN	Signal NAME
A 1	GND	B12	GND
A 2	SSTXp1	B11	SSRXp1
A 3	SSTXn1	B10	SSRXn1
A 4	V BUS	B 9	V BUS
A 5	CC1	B 8	SBU2
A 6	Dp1	B 7	Dn2
A 7	Dn1	B 6	Dp2
A 8	SBU1	B 5	CC2
A 9	V BUS	B 4	V BUS
A10	SSRXn2	B 3	SSTXn2
A11	SSRXp2	B 2	SSTXp2
A12	GND	B 1	GND

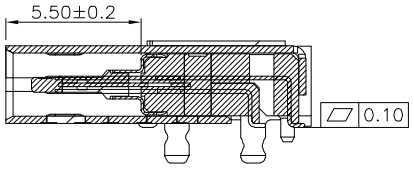

SECTION "A−A"

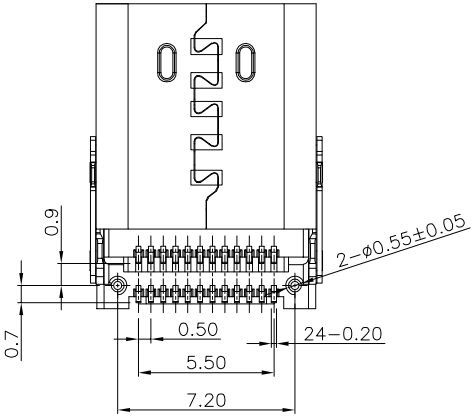

PROJECT \ LEVEL		A[better product]	B[average product]
Electrical Properties	Contact Rating	3.0A, 100V AC	
	Initial Contact Resistance	100mΩ max.	
	Insulation Resistance	100MΩ min.500V DC Skey/PD：100MΩ min.300V DC	
	Withstand Voltage	500V AC for 1 minute	350 V AC for 1 minut
Durable Performance	There No Load	6,000 Cycles	5,000 Cycles
	Rated Load	5,000 Cycles	4,000 Cycles
Storage Temp		25℃/50℃RH (Operating temperature: -35℃～+75℃)	
Operating Force		IF:10.0N MAX.(EF:10.0N MIN.)	
Heat Rrsistance		IR Reflow:255℃,5sec. Manual:350℃,3sec.	

DIMENSION CLASSIFICATION
■ ; CRITICAL
☒ ; MAJOR

TOLERANCE TABLE		
.X	±	0.40
.XX	±	0.25
.XXX	±	0.10
ANGLE	±	2°

台灣碩方精密電子科技有限公司
TAIWAN SOFNG PRECISION ELECTRONIC CO., LTD

TITLE	MC-312D-G 主体加长型 卧贴式3.1TYPE-C连接器			SOFNG 開關,連接器	
PART NO.	MC-312D-G			SERIES	SD106
APPROVED	Peck	DWG NO.	SOF-G006		
CHECKED	Paul	SCALE 1:1	UNIT mm	SIZE	A4
DRAWIN	David	REV	A0	SHEET NO.	1/1