P.C.B LAYOUT

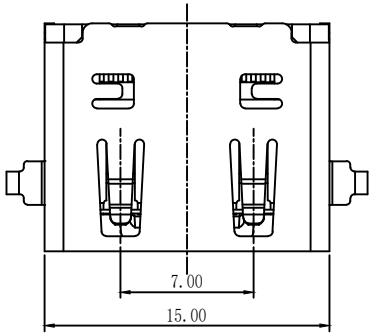

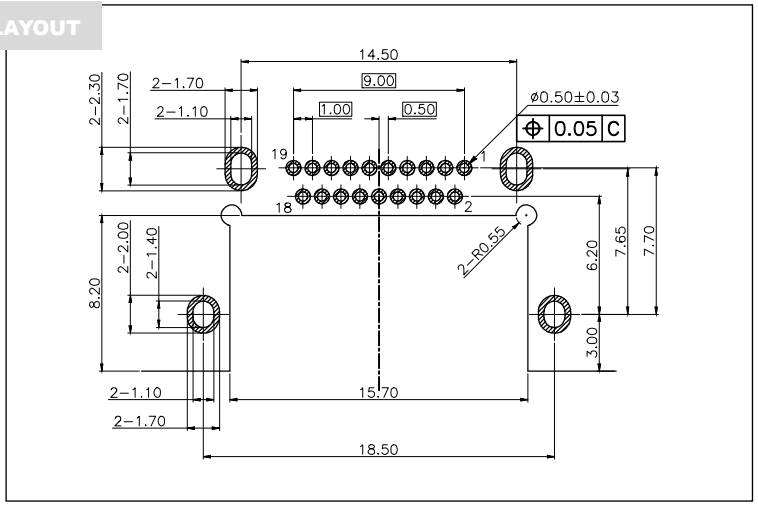

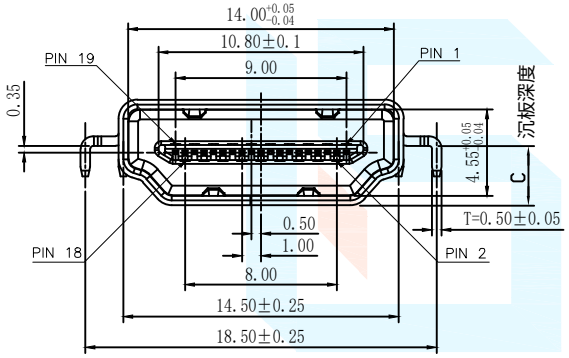

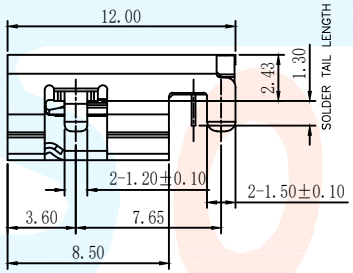

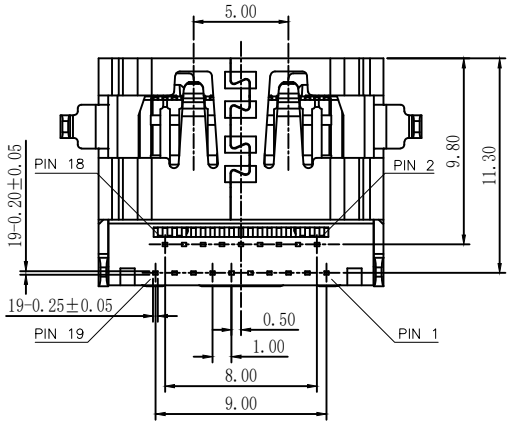

Note:
1.Material:
1.1 Housing: High temperature thermoplastic,UL94v-0
1.2 Orbit: High temperature thermoplastic,UL94v-0
1.3 Contact: copper alloy,;
Gold plated contact area;Tin plated solder area
1.4 Shell:Stainless;Ni plated allover;
Gold plated solder area
2.Specification:
2.1 Current rating: 0.5A Max
2.2 Voltage rating: 12V DC
2.3 Dielectric withstanding woltage:
500V(AC) for 1 min.

REVISION			
LTR	DESCRIPTION	DATE	APP
A0	NEW RELEASE	02/09/2022	PECK

HDMI PIN Assignmeng

Pin No.	A Type(HDMI)
1	TMDS Data 2+
2	TMDS Data 2 Shield
3	TMDS Data 2-
4	TMDS Data 1+
5	TMDS Data 1 Shield
6	TMDS Data 1-
7	TMDS Data 0+
8	TMDS Data 0 Shield
9	TMDS Data 0-
10	TMDS Clock+
11	TMDS Clock Shield
12	TMDS Clock-
13	CEC
14	Reserved (N.C.)
15	SCL
16	SDA
17	DDC/CEC Ground
18	+5V Power
19	Hot Plug Detect

HDMI-019G - CXX

产品型号

C沉板深度
C12=1.2mm
C18=1.8mm
C31=3.1mm

ITEM	NAME	Q'TY	NOTES
4	DUST COVER	1	THERMOPLASTIC UL94V-0
3	CONTACTS	19	COPPER ALLOY, GOLD PLATED OVER NICKEL ON CONTACT AREA AND 100u" MIN. TIN PLATED OVER NICKEL ON SOLDER TAILS
2	HOUSING	1	THERMOPLASTIC UL94V-0
1	SHELL	1	SPCC,NICKEL PLATED

DIMENSION CLASSIFICATION
■ : CRITICAL
⊠ : MAJOR

TOLERANCE TABLE

.X	±	0.40
.XX	±	0.25
.XXX	±	0.10
ANGLE	±	2°

台灣碩方精密電子科技有限公司
TAIWAN SOFNG PRECISION ELECTRONIC CO., LTD

TITLE	HDMI-019 沉板式HDMI连接器			開關,連接器 SOFNG	
PART NO.	HDMI-019			SERIES	SD106
APPROVED	Peck	DWG NO.	HDMI-019L-L		
CHECKED	Paul	SCALE 1:1	UNIT mm	SIZE	A4
DRAWIN	David		REV A0	SHEET NO.	1/1