中望CAD教育版设计

RoHS

MAPX	MODIFICATION	DRW	DATE

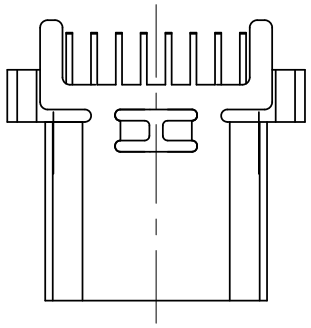

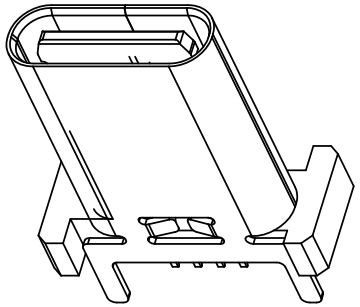

SPECIFICATIONS:

1. ELECTRICAL CHARACTERISTICS:
2. MECHANICAL CHARACTERISTICS:
   1-1. CONTACT RESISTANCE: 30m MAX. Ω
   1-2. DIELECTRIC WITHSTANDING VOLTAGE: 100V AC FOR ONE MINUTE.
   1-3. INSULATION RESISTANCE: 100M MIN. MEASURED BY 500 VDC

   2-1. INSERTION FORCE :0.5-2.0Kgf(REF.)
   2-2. WITHDRAWAL FORCE :0.8-2.0Kgf(REF.)
3. LIFE TEST: 10,000 CYCLES.

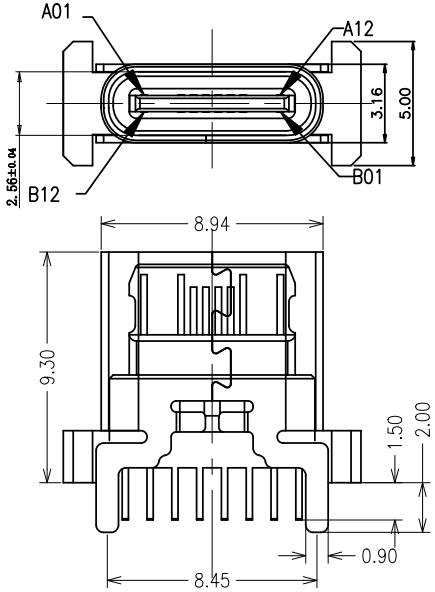

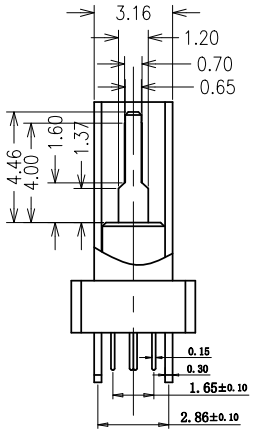

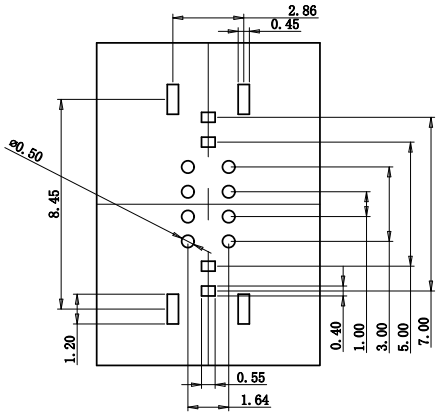

RECOMMENDED P.C.B. LAYOUT (T:1.00mm)

TOLERANCE UNSPECIFIED ±0.05mm

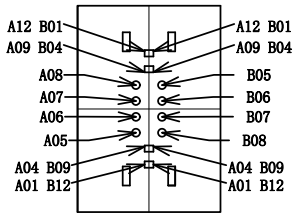

A1	GND	B12	GND
A4	VBUS	B9	VBUS
A5	CC1	B8	SBU2
A6	DP1	B7	DN2
A7	DN1	B6	DP2
A8	SBU1	B5	CC2
A9	VBUS	B4	VBUS
A12	GND	B1	GND
PIN	SIGNAL NAME	PIN	SIGNAL NAME

产品图

PRODUCT CHART DWG

公差一览表

TOLERANCE UNLESS OTHERMSE

X.	±0.35	X.	±5.°
.X	±0.25	.X	±2.°
.XX	±0.20	.XX	±1.°
.XXX	±0.05	.XXX	±0.5°

深圳市精拓金电子有限公司

Shenzhen Jing Tuo Jin Electronics Co., Ltd.

单位 UNITS	MM	制图 DRAWING	L-S-S	制图料号 PRODUCT PART NO.	918-648K2027Y30012		
比例 SCALE	1:1	审核 CHKD	郭治富	产品名称 PRODUCT NO.	TYPE-C3.1母座9.3立插无弹无柱四脚间距8.45LCP黑胶16PIN		
日期 DATE	2021-03-10	核准 APPD	黄国荣	角法 VIEW		版本 VER	A0

中望CAD教育版设计