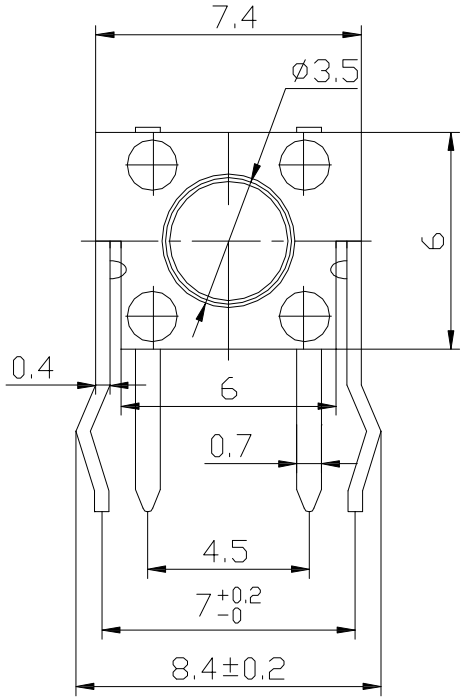

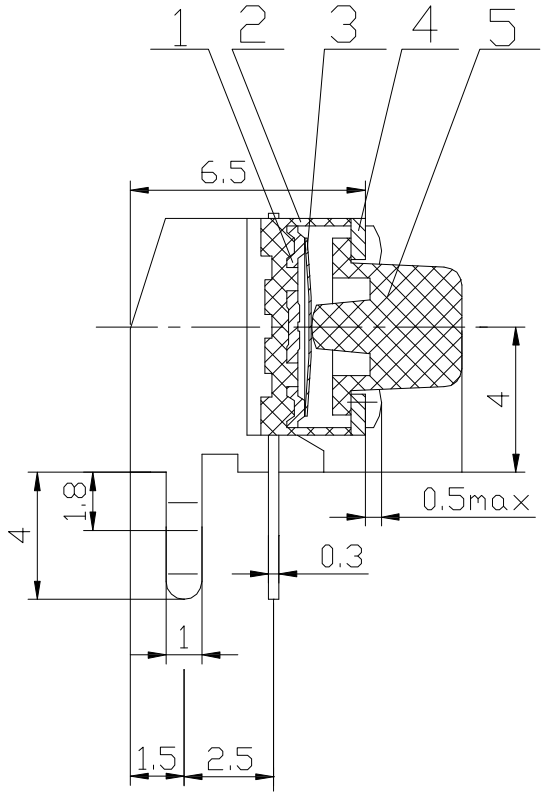

Material
Insulator : PA6T Glass Fiber(UL94-0)
Terminal : Brass plated Tin
Spring plate: SUS 301 plated Gold
Cover : SPCC plated Ni

Specification
Current Rating: 50mA.DC 5V
Insulation Resistance: 100MΩMin.at 100V DC
Dielectric Withstanding Voltage: AC 250V/ Min
Operating Temperature: -20° C~+70° C
Contact Resistance: 50mΩ Mix.

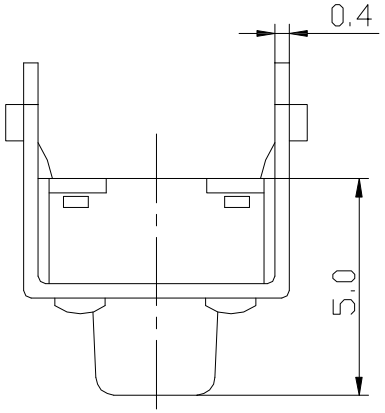

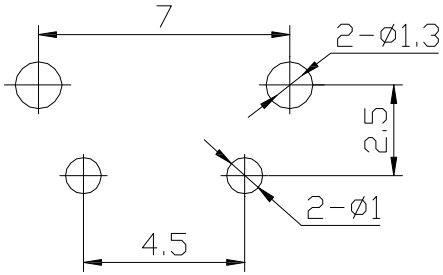

安装尺寸

NO.	NAME	MATERIAL	NATIONALITY	QTY.	FINISHING
1	TERMINAL	Brass	China	1	Silver plating
2	CASE	PA66	China	1	Black
3	CONT ACT	Phosphor bronze	Korea	1	Contact side silver plating
4	BRACKET	SPCC-SD	China	1	CuSn plating
5	STEM	PA66 China		1	H≤ 9.5mm
		PC JAP	AN	1	H>9.5mm

TOLERANCE TABLE	
.0	±0.20
.00	±0.10
.000	±0.05

APPROVED:	DATE:	Ckmtw 深圳市灿科盟实业有限公司 CHANKLEMENT INDUSTRYCO.,LTD
CHECKED:	DATE:	TITLE: 轻触开关 6*6*5 带支架 侧按
DRAWN: LYF	DATE: 2008-11-24	CLIENT P/N C3025482
		UNIT mm SCALE free SHEET 4/1
		FILE NO. K-KW02S01P-C000 REV. A GY01