THIS DRAWING IS UNPUBLISHED. RELEASED FOR PUBLICATION -,- .
© COPYRIGHT - TE Connectivity Ltd. ALL RIGHTS RESERVED.

REVISIONS

P	LTR	DESCRIPTION	DATE	DWN	APVD
	A4	REV PER ECR-20-004277 TO EOL -3	05MAY2020	ML	SZ

1. MATERIAL: ZINC ALLOY DIE CASTING, ZAMAK 3.
2. SURFACE FINISH: CHROMATE CONVERSION COATING. (ROHS COMPATIBLE).

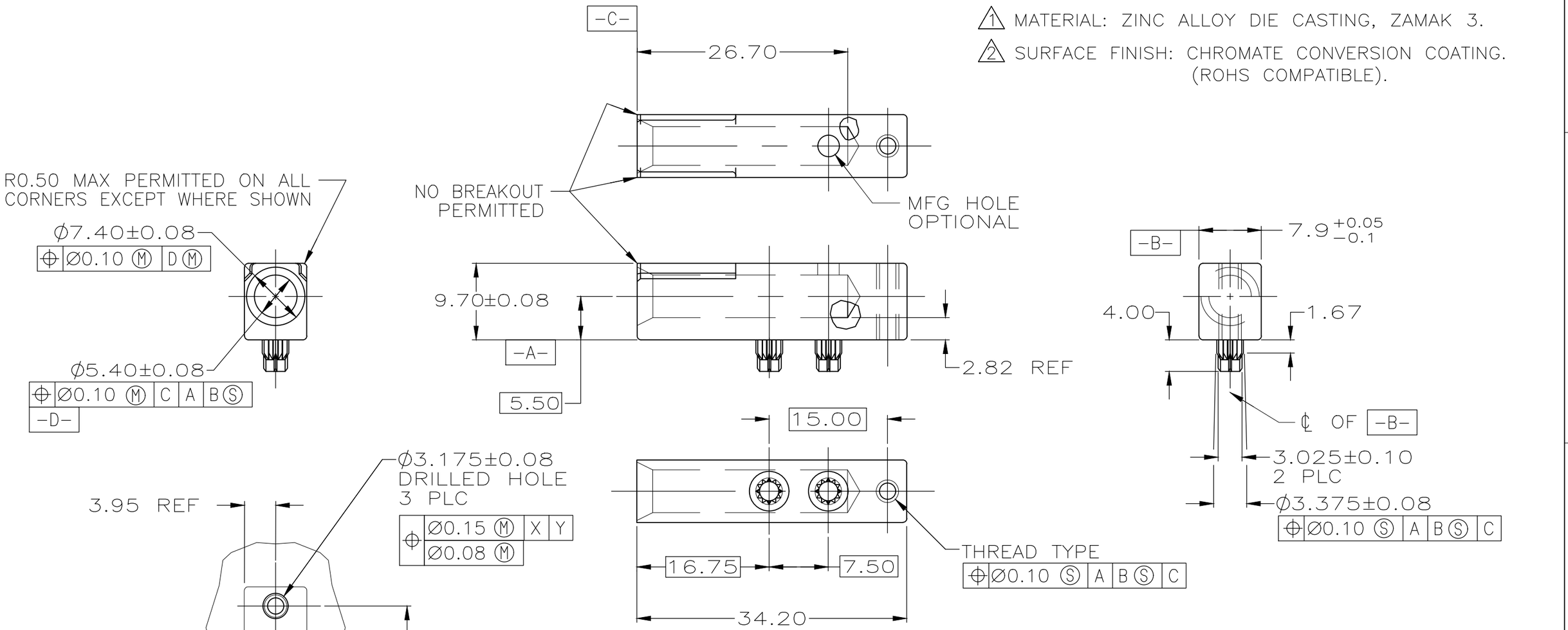

EOL	~~GUIDE SOCKET MODULE SAME AS -1 DIFFERENT TRAY FOR 11.5mm GRIPPER~~	~~#4-40 UNC-2B~~	~~5223979-3~~
	--	M3	5223979-2
	--	#4-40 UNC-2B	5223979-1
	REMARK	THREAD TYPE	PART NUMBER

THIS DRAWING IS A CONTROLLED DOCUMENT.

DIMENSIONS: mm

TOLERANCES UNLESS OTHERWISE SPECIFIED:

0 PLC	± -
1 PLC	± 0.3
2 PLC	± 0.13
3 PLC	± 0.100
4 PLC	± -
ANGLES	± 4°

MATERIAL 1

FINISH 2

DWN J. POLIGNONE 05APR05
CHK R. PATTERSON 05APR05
APVD R. PATTERSON 05APR05
PRODUCT SPEC —
APPLICATION SPEC —
WEIGHT —

TE Connectivity

NAME: MODULE, FEMALE GUIDE, UNIVERSAL POWER MODULE

SIZE	CAGE CODE	DRAWING NO	RESTRICTED TO
A3	00779	C-5223979	—

CUSTOMER DRAWING | SCALE 2:1 | SHEET 1 OF 1 | REV A4