POGO PIN	REAC/ROHS

REV	ECN NO	DESRIPTION	DESIGN	APPROVAL	DATE
A1	NEW	Replace frame			2018.06.12

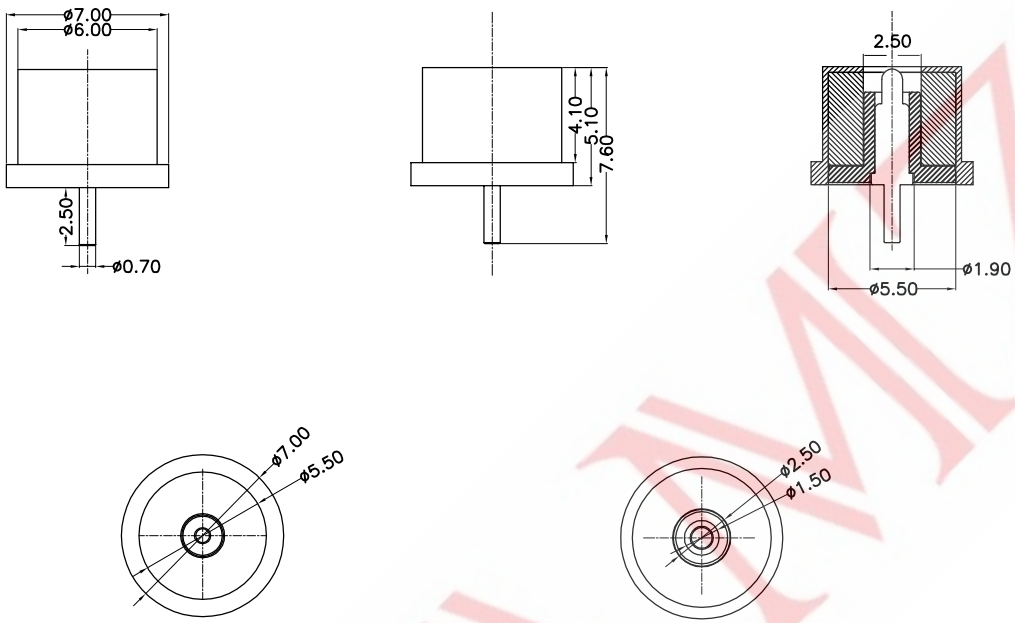

otes:
Characteristics:

A. Material(材料)
1) Housing:High Plastic BLACK(UL94V-0)
2) Plunger:brass c3604
3) Barrel:brass c3604
4) Spring:Stainless steel wire.

B. Plating(电镀)
1) Plunger:Brass,Plating 3u' Au over Min. 50u' Ni.
2) Barrel:Brass,Plating 3u' Au over Min. 50u' Ni.
3) Spring:Stainless steel wire.Plating Min. 1u' Au

C. Electrical(电器性能)
1) Operating voltage: 12V Max.
2) Opetating current: 1A Max.
3) Contact resistance: 30mohm Max. at working height(Quiescence).

D. Mechanical(机械性能)
1) Total stroke: 1.20mm.
2) Working height: 0.5mm.
3) Spring Force:65gf±10gf at working height
4) Mechanical life: 10,000 cycle min.
5) Don't exceed the Max. allowed compression

E. Environmental(工作环境)
1) Storage and operating temoperature range: -40°C~+85°C
2) Humidity range: 10% RH to 90% RH
3) Salt spray: 48H

F. Others(其它)
1) The dimensions marked * are critical, Should be checked in production
2) RoHS compliant product.

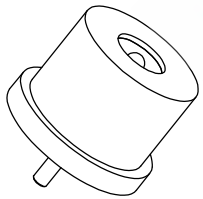

			GENERAL TOLERANCE	
			≥0~2<	±0.15
DESIGN	WANGGUIFA	2018.06.12	≥2~5<	±0.25
CHECKED	ZHENGUILAN	2018.06.12	≥0~2<	±0.15
APPROVED	LILIANJIANG	2018.06.14	≥5	±0.35

FIRST VIEW

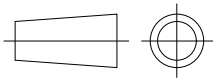

SCALE	1:1	UNIT	mm

SAMZO COMPONENTS
Electronic switch and connector manufacturer

The copyright belongs to samzo parts [China] Co., Ltd. please use the material after samzo parts agree to authorize. The final right of interpretation belongs to samzo parts.
WWW.KKK-JP.COM

TITLE:: 6MM 圆形 PA4.1 H7.6
DWG NO: GA0115-P001
PART NO: GA0115231173
MODEL NO: PG6L-5125-C-F
NAME: POGO PIN