REV.	DESCRIPTION	ECN NO.	NAME	DATE

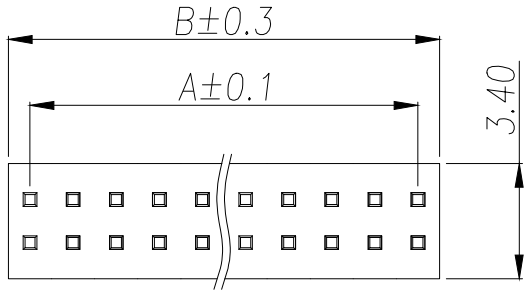

SPECIFICATIONS
Current Rating:1.0 Amps
Withstanding Voltage:AC 500V
Insulation Resistance:1000MΩ Min
Contact Resistance:20mΩ Max
Operation Temperature:−40° to+105°
Insrlator Material:Polyester(UL94V−0)
Contact Material:Brass
Standard:PA6T
Contact Plating:Gold Flash
Max.Processing Temp: 240°C for30−60seconds
(260°C for5seconds)

P/N	PIN	DIM.A	DIM.B
A127UP−ZS1P	1	0.00	1.27
A127UP−ZS2P	2	1.27	2.54
A127UP−ZS3P	3	2.54	3.81
A127UP−ZS4P	4	3.81	5.08
A127UP−ZS5P	5	5.08	6.35
A127UP−ZS6P	6	6.35	7.62
A127UP−ZS7P	7	7.62	8.89
A127UP−ZS8P	8	8.89	10.16
A127UP−ZS9P	9	10.16	11.43
.....	.....	.....	.....
A127UP−ZS50P	50	(PIN−1)x1.27	(PIN)x1.27

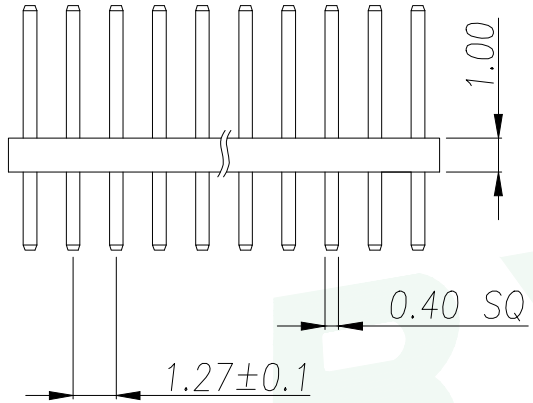

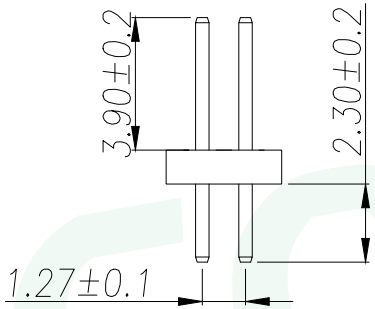

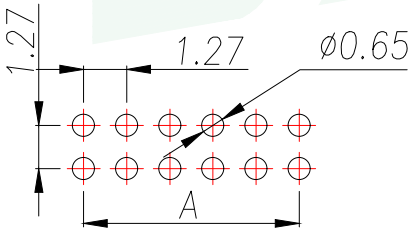

RECOMMEND P.C.B LAYOUT
PCB TOLERANCE:±0.05 (TOP VIEW)

GENERAL TOLERANCE	DONGGUAN BAOXUN PRECISION TECHNOLOGY CO., LTD				BXCONN®
DIM. TOL. X X.X ±0.30 X.XX ±0.25 X.XXX ±0.15 GENERAL ANGLE: ±3°	TITLE: 1.27PH H1.0 2xnPin 180度 W3.4 PC2.3 PA3.9 PB1.0 L7.2 6T				
	DWG. NO.: A127UP−ZSNP			DRAWN: MAX	
	PART NO.: A127UP−ZSNP			CHECKED: ELLA	
	UNIT: mm	SCALE: none	SHEET: 1of 1	DWG. SIZE: A4	LAYER: bxconn	APPROVED: WILL