中望CAD教育版设计

MAPX	MODIFICATION	DATE

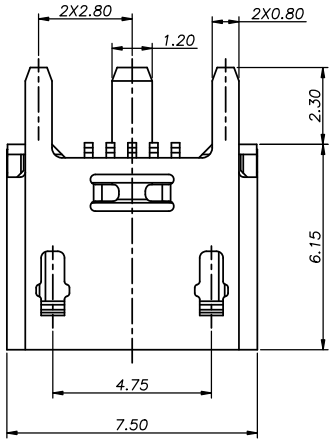

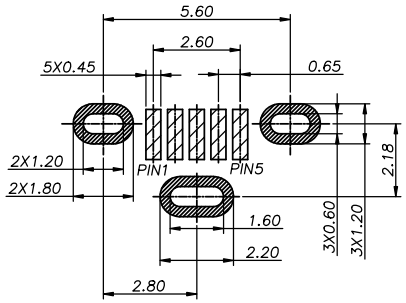

RECOMMENDED PCB LAYOUT(TOP VIEW)
GENERAL TOLERANCES:±0.05

NOTE:

1.MATERIAL SPECIFICATION:
- 1-1.HOUSING:LCP; UL94 V-0 BLACK.
- 1-2.CAP:LCP; UL94 V-0 BLACK.
- 1-3.CONTACTS: BRASS .
- 1-4.FRONT SHELL: STAINLESS STEEL

2.PLATING SPECIFICATION:
- 2-1.CONTACTS:
  - Ni 50u" MIN. UNDER PLATED OVER ALL.
  - Au1u''MIN PLATED ON THE FUNCTIONAL AREA OF CONTACT.
- 2-2.FRONT SHELL:
  - Ni 30u" MIN. UNDER PLATED OVER ALL.

3.MECHANICAL PERFORMANCE,
- 3-1.INSERTION FORCE: 3.5Kgf MAX
- 3-2.REMOVAL FORCE: 0.8kgf MIN
- 3-3.DURABILITY: 10000 CYCLES.

4.ELECTRICAL PERFORMANCE,
- 4-1.CURRENT RATING:
  - VBUS & GND PINS: 1.8A MAX.
  - OTHER PINS: 0.5A MAX.
- 4-2.INSULATION RESISTANCE: 100MΩ MIN
- 4-3.DIELECTRIC WITHSTAND VOLTAGE,AC 100V FOR 1 MINUTE.

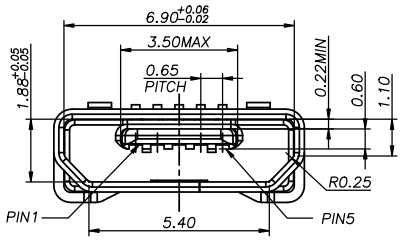

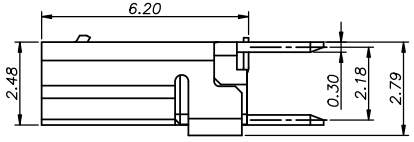

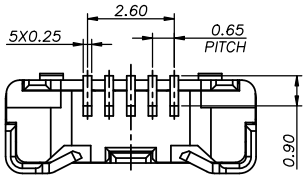

PIN	NAME
5	GND
4	ID
3	D+
2	D-
1	VBUS

PIN ASSIGNMENT

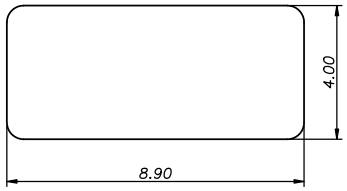

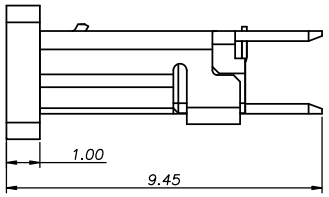

CAP DIMENSION SKETCH MAP

产品图 PRODUCT CHART DWG				深圳市精拓金电子有限公司							
公差一览表 TOLERANCE UNLESS OTHERMSE				单位 UNITS	MM	制图 DRAWING	许榕强	制图料号 PRODUCT PART NO.	920-164A2021Y10106		
X.	±0.15	X.	±5.°	比例 SCALE	1:1	审核 CHKD	郭治富	产品名称 PRODUCT NO.	MICRO 5P/F三脚无凸包9.45/6.15无边立式LCP黑胶SMT+胶塞		
.X	±0.10	.X	±2.°	日期 DATE	2016-09-09	核准 APPD	黄国荣	角法 VIEW		版本 VER	A□
.XX	±0.05	.XX	±1.°								
.XXX	±0.03	.XXX	±0.5°								

中望CAD教育版设计