REV	ECN NO	DESRIPTION	DESIGN	APPROVAL	DATE
A1	NEW	Replace frame			2018.06.12

IPX7 1m/30min

ROHS

NOTES
1.CURRENT RATING: 1A.
2.CONTACT RESISTANCE: 100mΩ MAX.
3.INSULATION RESISTANCE: 100MΩ MIN.
4.DIELECTRIC WITHSTANDING: 500V AC MIN.
5.DURABILITY: 5000 CYCLES MIN.
6.CONNECTOR MATING FORCES: 3~30N.
7.CONNECTOR UNMATING FORCES: 3~30NX.
8.SALT SPRAY: 24HOUR
9.WATERPROOF LEVEL: IP67.
10.OPERATING TEMPERATURE: -25°C TO +85°C.
Not to install the waterproof ring shipment

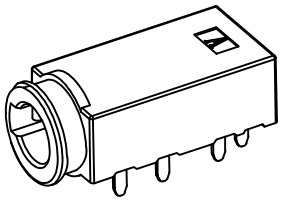

3D VIEW

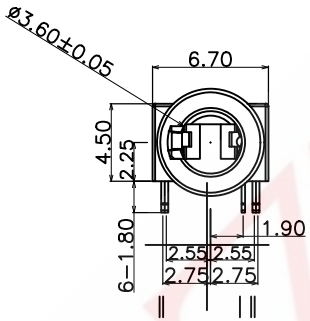

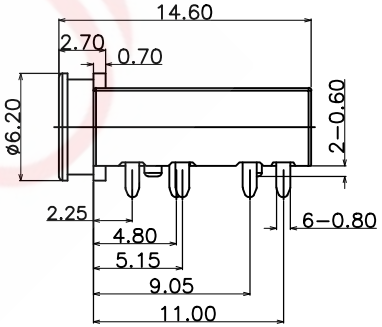

8F W 6 146 A T A

- MODEL DEFINITION
- Mould Number:01
- Fixing Method:Fixing Column
- Interface Method:Convention Extended Opening
- Overall Length:14.6mm
- Pin Position:6PIN
- Mounting Method:DIP
- Product Series: 3.5mm Audio Jack

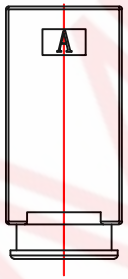

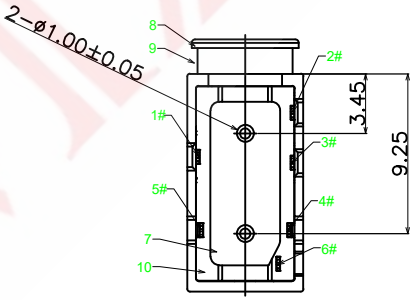

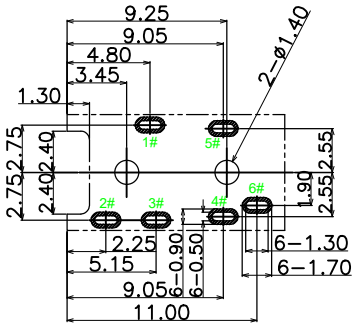

PCB LAYOUT (TOP VIEW)
TOLERANCE: ±0.05

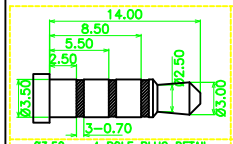

Ø3.50mm 4 POLE PLUG DETAIL

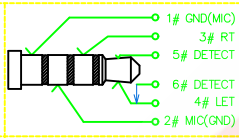

Ø3.50mm 4 POLE PLUG SCHEMATIC

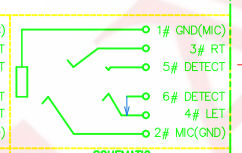

SCHEMATIC

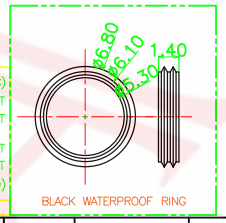

BLACK WATERPROOF RING

ITEM	DESCRIPTION	MATERIAL	QTY	FINSH/COLOR					
F	胶水	环氧树脂	1	黑色					
E	防水圈	硅胶	1	黑色				GENERAL TOLERANCE	
D	基座	高温尼龙	1	黑色				≥0~2<	±0.15
C	封盖	高温尼龙	1	黑色	DESIGN	WANGGUIFA	2018.06.12	≥2~5<	±0.25
B	引脚	磷青铜	2.3.6	镀镍/接触区焊位镀金	CHECKED	ZHENGUILAN	2018.06.12	≥0~2<	±0.15
A	引脚	不锈钢	1.4.5	镀镍/接触区焊位镀金	APPROVED	LILIANJIANG	2018.06.14	≥5	±0.35

FIRST VIEW

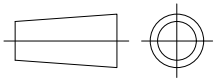

SCALE	1:1	UNIT	mm

The copyright belongs to samzo parts [China] Co., Ltd. please use the material after samzo parts agree to authorize. The final right of interpretation belongs to samzo parts.
WWW.KKK-JP.COM

SAMZO COMPONENTS
Electronic switch and connector manufacturer

TITLE:: 3.5mm 6P DIP JCAK IPX7
DWG NO: 8FW6146-P03
PART NO: 8FW61461533
MODEL NO: 8FW6146ATA
NAME: WATERPROOF SOCKET