YIYUAN

30 Min/1.5M
IP-X8

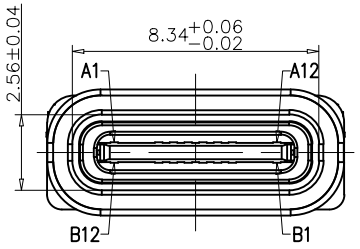

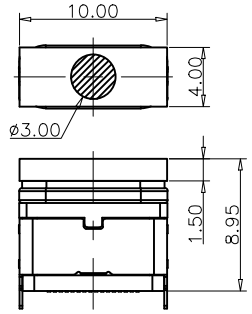

装前塞示意图

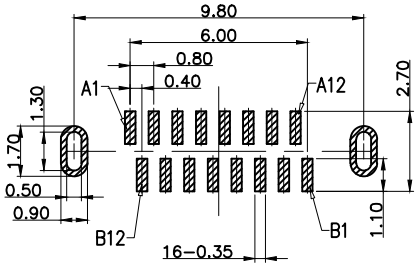

RECOMMEND P.C.B LAYOUT

TOLERANCE UNSPECIFIED ±0.05mm

REV.	ECN	DESCRIPTION	MDF'D	DATE
A1	———	新订图面	LUO	2021.6.2

NOTES:

SPECIFICATION:

1.CURRENT RATING: 3.0 A
2.VOLTAGE RATING: 3.0 V
3.VBUS & GND PINS AND OTHER PINS: 40mΩ/PIN MAX
SHIELD: 50mΩ/MAX
LLCR MAX. CHANGE OF ALL PINS: 10Ωm
4.INSULATION RESISTANCE: 100MΩ MIN
5.DIELECTRIC WITHSTAND VOLTAGE,AC 100V FOR 1MIN
6.LNSERTION FORCE: 0.5~2.0kgf
7.UNMATING FORCE: 0.8-2.0kgf
8.DURABILITY: 10000 CYCLES
9.OPERATING TEMPERATURE: -35°C~+85°C
10.THE PEAK TEMPERATURE ON THE BOARO SHALL BE MAINTAINED FOR 10 SECONDS AT 260°C
11.WATERPROOF:IP-X7.

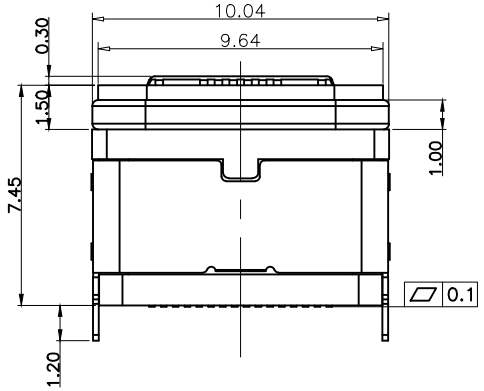

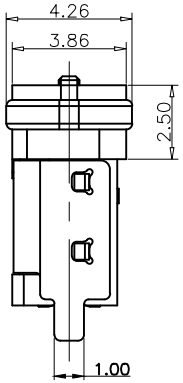

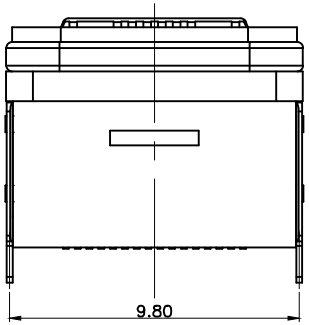

USB TYPE C PIN ASSIGNMENTS

PIN NUMBER	SIGNAL NAME	PIN NUMBER	SIGNAL NAME
A1	GND	B12	GND
A4	VBUS	B9	VBUS
A5	CC1	B8	SBU2
A6	DP1	B7	DN2
A7	DN1	B6	DP2
A8	SBU1	B5	CC2
A9	VBUS	B4	VBUS
A12	GND	B1	GND

TABLE:

NO	PART	Q'TY	Material
1	PLASTIC SHELL	1	PA UL94 V-0 BLACK
2	CONTACT	16	C7025,TIN80u"/Au3u"/NI30u"PLATED
3	MID PLATE	1	SUS301,NO PLATING
4	HOUSING	1	LCP UL94 V-0 BLACK
5	SHIELDING PLATE	1	SUS,NI PLATED
6	WATERPROOF RING	1	SILICONE UL94 V-0 BLACK
7	CAP	1	LCP UL94 V-0 BLACK

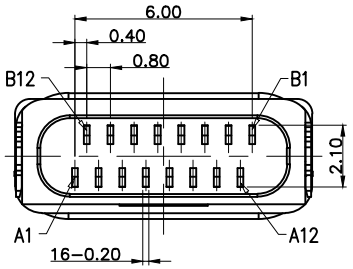

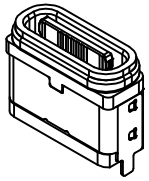

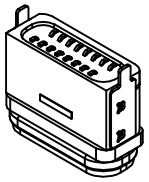

深圳市怡远科技有限公司
SHENZHEN YIYUAN TECHNOLGOY CO.,LTD

品名(ITEM NO)	TYPE C 16P 防水母座立式贴板 L=7.45mm(U型全塑款)	页码(SHEET)	1/1
料号(PART NO)	YTC-WP16-24U	版本(REV)	A1
图号(DWG NO)		日期(DATE)	2021.6.2
		设计(DESIGN)	LUO JIE
		审核(CHECKED)	ROGER LI
		核准(APPROVED)	ROC ZHAO

单位(UNIT): MM

比例(SCALE) 1:1

未注公差 TOLERANCE UNSPECIFIED

X.X	±0.20
X.XX	±0.15
X.XXX	±0.10
X°	±5°
X.X°	±2°

These drawings and specifications are Shenzhen Yiyuan Technology Co Ltd.The property should not be copied. Without Shenzhen Yiyuan Technology Co. Ltd.Prior written consent to copy or use in any way