PRODUCT NO:	DS801FPR-0061			
REV	DESCRIPTION	DWN	DATE	APPROVEN
A	FIRST ISSUE	W.cheng	2020/10/13	John kine
B				

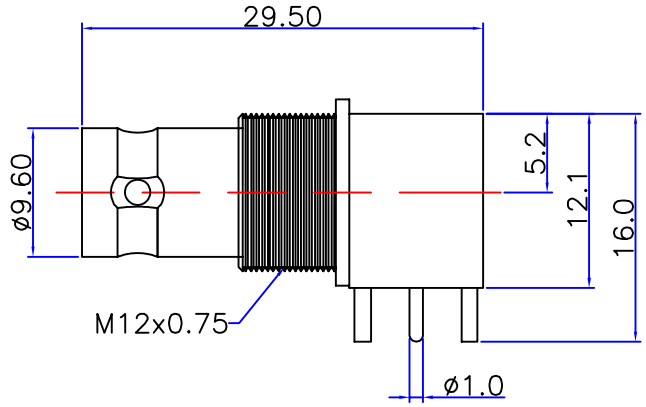

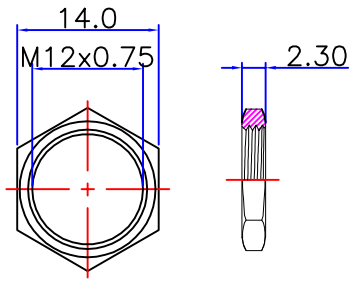

NUT

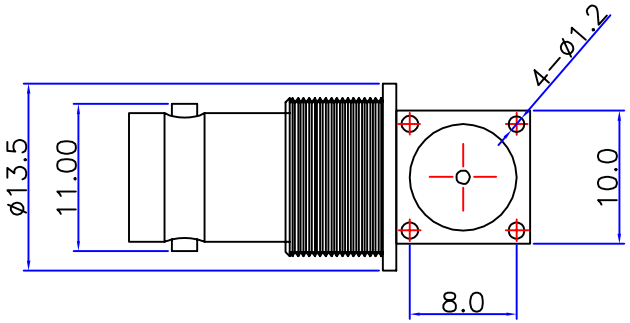

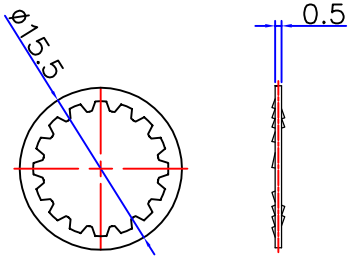

WASHER

SPECIFICATIONS:

IMPEDANCE: 50 ohms
FREQUENCY RANGE: 0~3GHZ
VSWR: 1.5MAX
WORKING VOLTAGE: 500V RMS@SEA LEVEL
INSULATION RESISTANCE: 5000 ohms min
TEMPERATURE RANGE: -65℃ TO +165℃
RELATIVE TEMPERATURE: ≤ 95%(40℃±2℃)
DRAWINGS PRODUCTS ARE IN LINE WITH ROHS STANDARDS

NO	COMPONENT NUMBER	MATERIAL	FINISH	QTY
1	BODY	BRASS	NICKEL	1
2	CONTACT PIN	BRASS	GOLD	1
3	INSULATOR	TEFLON	WHITE	1
4	WASHER	TE	NICKEL	1
5	UNT	BRASS	NICKEL	1
6				
7				
8				
9				
10				

NOTE:

DRAWN		2020/10/13
CHECKED		
APPROVALS		

TOIERANCE	UNLESSOTHERWISPECIFIED TOLERANCESFDRINCHESARE 0.5-8MM±0.20MM 8-30MM±0.40MM 30-120MM±0.50MM
VIEW	
UNIT	MM
SCALE	1 : 1

DOSIN -RF CONNECTOR DOSIN INDUSTRIAL(HK)CO.,LTD
东莞市德索五金电子有限公司
Dongguan Dosin Hardware Electronics Co.,Ltd.
Web: http://www.dosinconn.com
dosin2005@dosin-china.com
E-mail: dosin2005@163.com
Tel: (0086)769-81153906
Fax: (0086)769-81875836

NAME: BNC JACK CONNECTOR

SIZE A | PRODUCT NO: DS801FPR-0061 | SIZE A

DATETIME 2020/10/13 | CAD FILE D/companydrawings/BD | SHEET: 1 OF 1