| linear dimension(Tolerances Standard GB/T 14486-2008) | | | | | | | | — | ▱ | ⊥ |
|---|---|---|---|---|---|---|---|---|---|---|
| variable range | to 6 | over 6 to 10 | over 10 to 30 | over 30 to 60 | over 60 to 100 | over 100 to 160 | over 160 to | to 10 | over 10 to 100 | over 100 to |
| tolerance | ±0.20 | ±0.30 | ±0.50 | ±0.70 | ±1.00 | ±1.30 | ±1.60 | 0.10 | 0.30 | 0.60 |

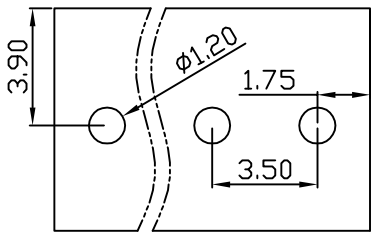


PCB Layout

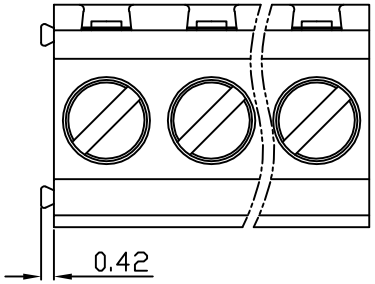


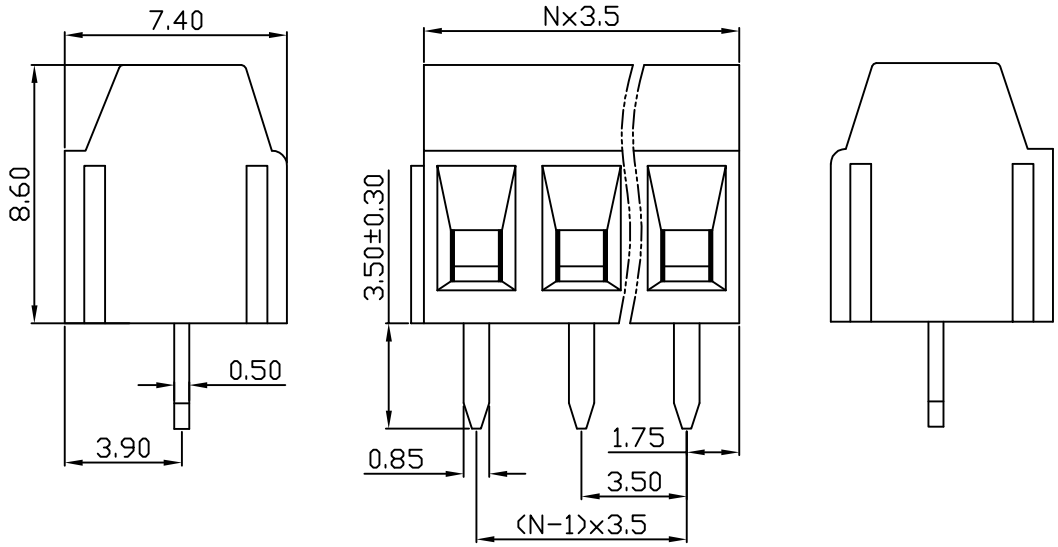


| UL/CUL 技术 参数<br>UL/CUL Technical Data | | | |
|---|---|---|---|
| 等 级 Use Group | B | C | D |
| 额定电压 Rated Voltage [V] | 300 | - | 300 |
| 额定电流 Rated Current [A] | 10 | - | 10 |
| 接线范围 Wire Range<br>单/多芯线 Solid/Stranded [AWG] | 28-16 | | |
| 耐电压 Withstanding Voltage | 1600V/1Min | | |
| IEC 技术参数<br>IEC Technical Data | | | |
| 过电压类别 Overvoltage Category | III | III | II |
| 污染等级 Contamination Class | 3 | 2 | 2 |
| 额定电压 Rated Voltage [V] | 160 | 200 | 400 |
| 额定电流 Rated Current [A] | 13.5 | 13.5 | 13.5 |
| 额定冲击电压<br>Impulse withstand voltagea [KV] | 2.5 | 2.5 | 2.5 |
| 导线截面积 Conductor cross section<br>硬质/柔性导线 Solid/ flexible [mm²] | 1.0 | | |
| 材 料 Material | | | |
| 绝缘材料 Insulation Material | PA66 | | |
| 阻燃等级 Imflammability | UL94V-0 | | |
| 导体材料 Contactor Material | 铜合金 Copper alloy | | |
| 导体表面镀层 Contactive Coating | 镀锡 Sn Plated | | |
| 一般参数 Other Data | | | |
| 间距 Pitch [mm] | 3.5 | | |
| 极数 Poles [P] | 02~24 | | |
| 剥线长度 Stripping Length [mm] | 4-5 | | |
| 螺丝 Screw/扭矩 Torque(Max) [N.m] | M2/0.2 | | |
| 工作温度 Operating temperatur [°C] | -40~+105 | | |
| 引针尺寸 Pin Dimensions [mm] | 0.50x0.85 | | |
| PCB板孔径 PCB Hole Diameter [mm] | 1.20 | | |

DB125 — 3.5 — XXP — C — S/P

(Series No.) (Pitch) (Poles) Slotted/Phillips

(Color) : 1.(Green) 2.(Black) 3.(Blue) 4.(Clear) 5.(Gray)
6.(Orange) 7.(Red) 8.(White) 9.(Yellow)

| | | | | | |
|---|---|---|---|---|---|
| DORABO | 宁波地博电气有限公司<br>Ningbo Dorabo Electric CO., Ltd | | | | |
| | NAME: DB125-3.5-XXP-C-S | | | | |
| APPD: JTing Chen 2022.7.14 | | SIZE: A4 | mm (inch) | REV | T0-1 |
| CHKD: Duck Mao 2022.7.14 | | | | | |
| DRFT: Steven Lu 2022.7.14 | | TYPE: CUSTOMER_DRAWING | SCALE: 1:1 | SHEET | 1/1 |