IP67

REAC/ROHS

REV	ECN NO	DESRIPTION	DESIGN	APPROVAL	DATE
A1	NEW	Replace frame			2018.06.12

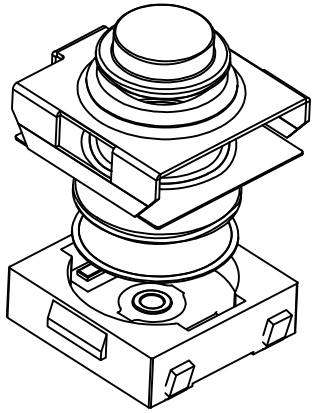

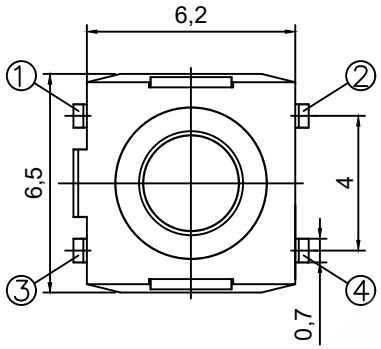

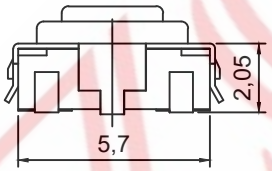

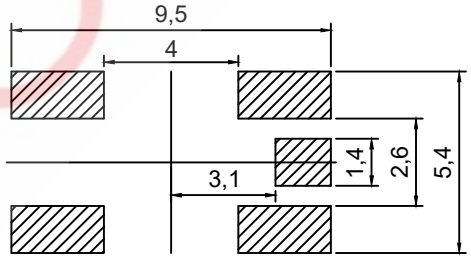

印制线路板图

LS 4 P *** 2 1 1 1

Ⓐ Ⓑ Ⓒ Ⓓ Ⓔ Ⓕ Ⓖ Ⓗ

A.系列:LS-6.2*6.2mm
B.贴装方式:4-立式贴片
C.引脚规格:P-4+接地PIN
D.操作高度:320-3.2/340-3.4/360-3.6mm
E:操作力度:0-160/1-260/2-350gf
F:操作寿命:1-100,000/次
G:固定方式:1-无住
H:物料编码:1-常规（红钮）

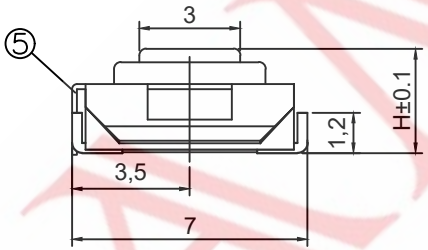

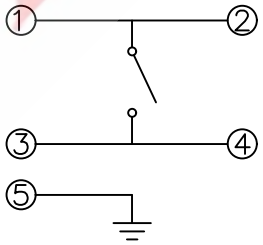

电路图

序号	零件名称	材料规格	数量	备注
7	引脚、触点	黄铜	1	镀银
6	基座	PPA	1	耐温280℃
5	簧片	不锈钢	1	覆银
4	内籽	PPA	1	耐温280℃
3	防尘膜	PI	1	耐温280℃(黄色)
2	盖板	磷铜	1	镀锡
1	按钮	PPA	1	耐温280℃

主要技术参数、性能

The Main Thchnology Performance

额定电流、电压 Rate voltage.current	50mA DC12V
接触电阻 Contact resistance	≤50mΩ
按力 Operating force	±40gf
行程 Travel	0.25±0.10mm
绝缘电阻 Insulated resistance	≥100MΩ
介电强度 Dielectric strength	≥250VAC/1min

			GENERAL TOLERANCE	
			≥0~2<	±0.15
DESIGN	WANGGUIFA	2018.06.12	≥2~5<	±0.25
CHECKED	ZHENGUILAN	2018.06.12	≥0~2<	±0.15
APPROVED	LILIANJIANG	2018.06.14	≥5	±0.35

FIRST VIEW

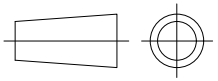

SCALE	1:1	UNIT	mm

The copyright belongs to samzo parts [China] Co., Ltd. please use the material after samzo parts agree to authorize. The final right of interpretation belongs to samzo parts.
WWW.KKK-JP.COM

SAMZO COMPONENTS

Electronic switch and connector manufacturer

TITLE:: 6.2*6.2拉伸盖U脚带接地脚红钮

DWG NO: LS4P-P0029

PART NO: LS4P00059

MODEL NO: LS4P-***-*-111

NAME: TACT SWITCH