SAMZO | REAC/ROHS

REV	ECN NO	DESRIPTION	DESIGN	APPROVAL	DATE
A1	NEW	Replace frame			2020.06.12

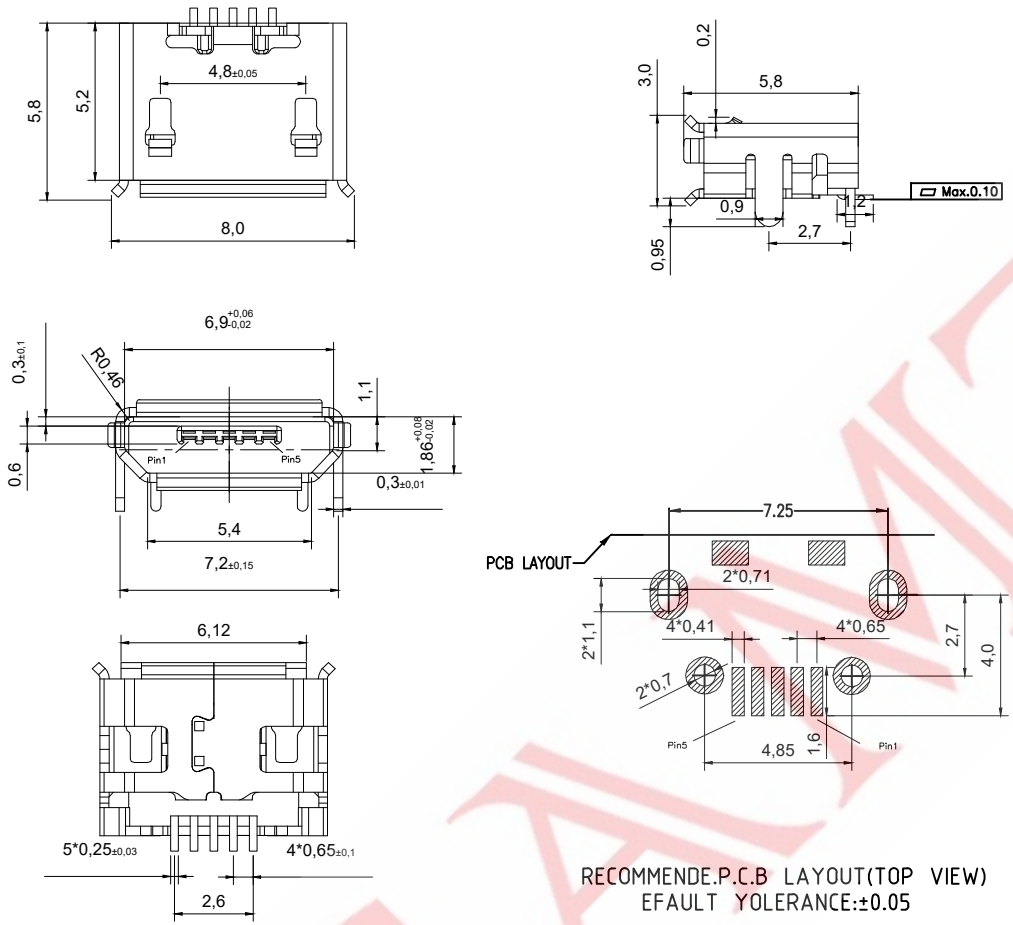

RECOMMENDE.P.C.B LAYOUT(TOP VIEW)
EFAULT YOLERANCE:±0.05

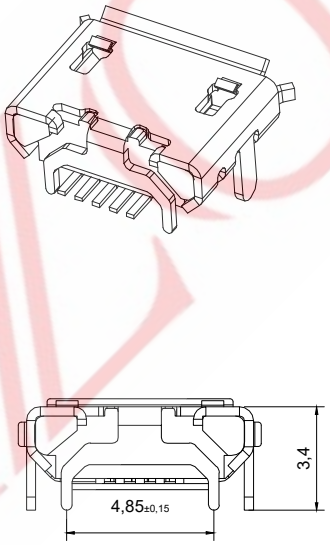

规格说明:Specifications:

电气特性:Electrical:

1.额定电流: Current Rating
1.5A/contact terminal

2.额定电压: Voltage Rating
30V DC

3.接触阻抗:Contact Resistance
30 milliohms MAX

4.耐电压:Dielectnic Withstanding Voitage:
100 V AC AT Sea Levol

5.绝缘阻抗:Lnsulation Resistance:
100MEGA ohms MIN

机械性能:Mechanical:

1.插拔力: Connector Mate and Unmate Force
Mate force:3.57kgf(MAX)
Unmate force:1.02kgf(MIN)

2.端子保持力: Terminal Retenion
0.5kgf(MIN)

UCCRATDAYA

- Code: M01.
- Interface: Curled edge。
- Lifetime: 3,000 cycles.
- Material: Stainless steel.
- Type: Fixed column.
- Appearance Size: 5mm.
- Mounting method: Small ox foot.
- Specification: 5 pin.
- Series: Micro USB.

ITEM	DESCRIPTION	MATERIAL	QTY	FINSH/COLOR					
								GENERAL TOLERANCE	
								≥0~2<	±0.15
C	塑胶	LCP	1	黑色	DESIGN	WANGGUIFA	2020.06.12	≥2~5<	±0.25
B	端子	C2680/C5191	1	镀金	CHECKED	ZHENGUILAN	2020.06.12	≥0~2<	±0.15
A	外壳	SUS/C2680	1	镀锡	APPROVED	LILIANJIANG	2020.06.14	≥5	±0.35

FIRST VIEW

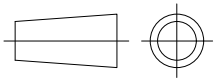

SCALE 1:1 UNIT mm

The copyright belongs to samzo parts [China] Co., Ltd. please use the material after samzo parts agree to authorize. The final right of interpretation belongs to samzo parts.
WWW.KKK-JP.COM

SAMZO COMPONENTS
Electronic switch and connector manufacturer

TITLE:: MICRO 5P 小牛脚 卷边 带焊盘

DWG NO: UCCRA-P0319

PART NO: UCCRA137708

MODEL NO: UCCRATDAYA

NAME: MICRO CONN