# CND-tek

# TG2481S

EN

10G Single Port Transformer Module

1. Designed for long haul 10G Single Port Transformer Module
2. Supports four pairs of category 5 UTP cable,Cable interface for isolation and low common mode emissions.
3 . Low profile Surface Mount Packaging designed for Hi-Temp Reflow Process
4. Compliant with IEEE 802.3an standard for 10G Base-Z,Designed to support 1:1 Turns Ratio Transceivers.

## DIMENSIONS & SCHEMATICS

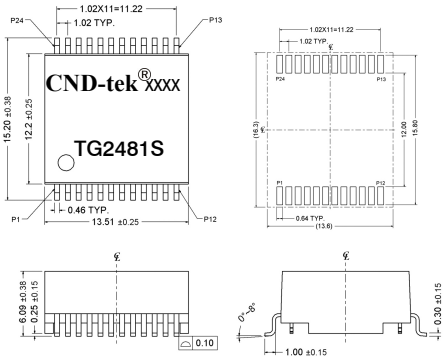


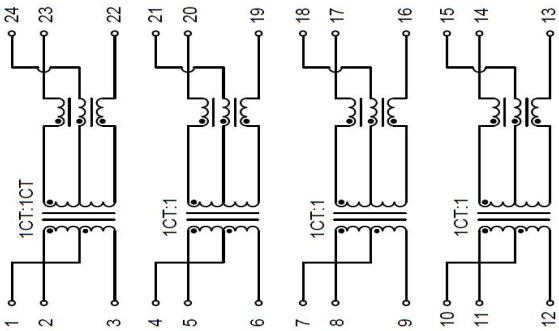


## TECHNICAL SPECIFICATIONS

| | |
|---|---|
| OCL : | 160 μH Min. @ 100 KHz, 100mV with 8mA DC Bias |
| Leakage Inductance: | 0.50 μH Max. @ 100KHz, 0.1V |
| DCR: | 1.00Ω Max |
| Turns Ratio(±5%): | 1CT:1CT(TX), 1CT:1CT(RX) |
| Insertion Loss: | -0.55dB Max. @ 1MHz<br>-0.55dB Max. @ 5MHz<br>-0.77dB Max. @ 200MHz<br>-1.41 dB Max. @400MHz |
| Return Loss: | -20dBMin.@1MHz<br>-20dBMin.@100MHz<br>-18dBMin.@200MHz<br>-15dBMin.@300MHz<br>-10dBMin.@400MHz<br>-8dBMin.@500MHz |
| Cross Talk: | -34dB Min.@1MHz<br>-23 dB Min.@ 350 MHz<br>-23 dB Min.@ 500 MHz |
| Common Mode Rejection : | - 30 dB Min.@ 1-100 MHz<br>-25 dB Min.@ 100-300 MHz<br>- 20 dB Min.@ 300-500 MHz |
| Isolation HI-POT: | 1500Vrms 1mA 60Second or 1800VAC 1mA 1S |
| Storage temperature range: | -40 ℃～+85 ℃ |
| Operating Temperature range: | -40 ℃～+125 ℃ |

## PACKING SPECIFICATION

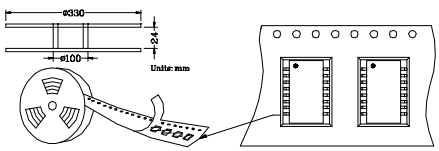


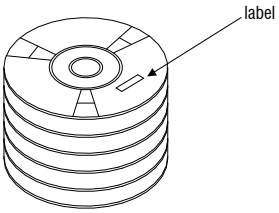


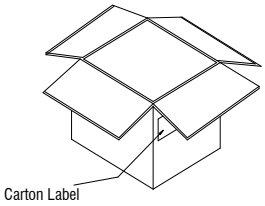


1. units/reel:400PCS
2 reel/carton:5PCS
3.units/carton :2000PCS

EXPORT CARTON:367(L)x337(W)x235(H)